Series OP

Orifice Plate Flow Meter

Stainless Steel for Use with Liquids and Gases

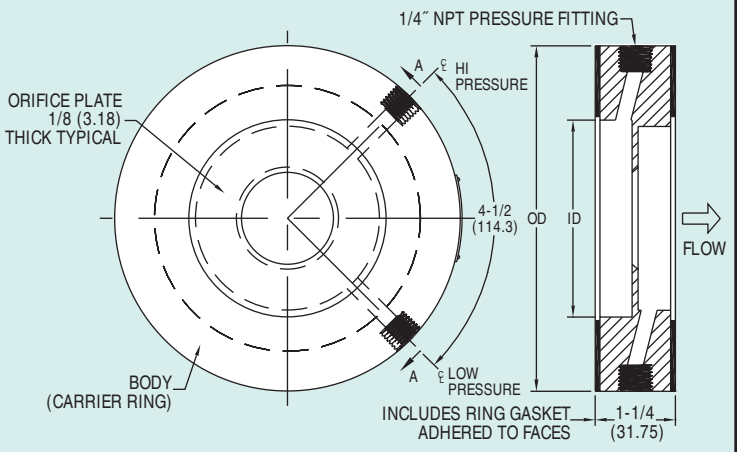

The Series OP Orifice Plate Flow Meter is a complete orifice plate flow metering package. It incorporates a stainless steel orifice plate with a unique holder or carrier ring containing metering taps and integral gaskets. It was designed for use wherever there is an application for a conventional flow orifice plate. It can also be used in place of other primary differential producers for efficiency and cost effectiveness. Installation is accomplished simply by slipping the unit between standard flanges (orifice flanges are not required). The Series OP is available in line sizes from 1/2″ to 24″ and can be used with compatible liquids and gases.

FEATURES

- Mounted with standard flanges
- Corner type metering taps
- Corrosion free material
- Simplified installation
- Stainless steel wetted parts
- Proven through a wide range of applications for energy efficiency
- Assures long term reliability and accuracy

APPLICATION

- Fluid flow rates in building water lines

SPECIFICATIONS

Service: For metering compatible liquids and gases.
Wetted Material: 304 SS, Buna-N gaskets.
Accuracy: 0.6% of full scale flow. (Beta = .2-.6) ±0.7% for Beta greater than .6.
Temperature: -50 to 200°F (-45 to 93°C).
Pressure: Limited only by pipe and flange rating restrictions.
Head Loss: 1-Beta ratio^2 eg: 1-0.7^2 = 1-0.49 = 51% of the d.p.
Line Sizes: 1/2″ to 24″.
Process Connection: 1/4″ female NPT.
Installation: Standard flange, any rating (orifice flanges not required).
Pipe Requirements: General requirements 10 diameter upstream and 5 diameter downstream of orifice plate.
Weight: Varies with line size. See chart.

Series OP Orifice Plate Flow Meter

- Material 304/304 L- dual certified- Gaskets Buna "N"
- Based on 70°F, 14.7 psia (Base Conditions)
- Beta Value Based on Std Sch pipe I.D.
- 1.25˝ overall thickness
- Orifice plate thickness is 0.125˝

					WATER CAPACITY		AIR CAPACITY - Flow in SCFM			
Model Number	Weight (lbs)	Line Size	Bore	Beta	Inches d.p. W/C	Flow in GPM	Inch d.p. W/C	at 14.7 PSIA (0 PSIG)	at 20 psig	at 100 psig
OP-A-1	1.00	1/2"	0.200"	0.32	20	0.62	20	2.35	3.63	6.61
OP-A-2	1.00	1/2"	0.310"	0.50	100	3.44	100	12.21	19.58	36.37
OP-A-3	1.00	1/2"	0.430"	0.69	320	13.00	200	32.77	56.15	107.47
OP-B-1	1.00	3/4"	0.250"	0.30	20	0.97	20	3.65	5.66	10.3
OP-B-2	1.00	3/4"	0.400"	0.49	100	5.69	100	20.21	32.44	60.26
OP-B-3	1.00	3/4"	0.580"	0.70	320	23.82	200	59.92	102.91	197.2
OP-C-1	2.00	1"	0.300"	0.29	20	1.38	20	5.24	8.11	14.8
OP-C-2	2.00	1"	0.520"	0.49	100	9.63	100	34.2	54.92	102.09
OP-C-3	2.00	1"	0.720"	0.69	320	36.15	200	91.28	156.51	300
OP-D-1	2.00	1.25"	0.400"	0.29	20	2.46	20	9.31	14.41	26.3
OP-D-2	2.00	1.25"	0.700"	0.51	100	17.48	100	62.09	99.75	185.5
OP-D-3	2.00	1.25"	1.00"	0.72	320	71.77	200	180	309.97	595.2
OP-E-1	2.00	1.5"	0.500"	0.31	20	3.85	20	14.57	22.55	41.16
OP-E-2	2.00	1.5"	0.800"	0.50	100	22.73	100	80.82	129.68	241.5
OP-E-3	2.00	1.5"	1.100"	0.68	320	83.95	200	212.18	363.93	697.39
OP-F-1	3.00	2"	0.600"	0.29	20	5.52	20	20.92	32.38	59.13
OP-F-2	3.00	2"	1.000"	0.48	100	35.34	100	125.74	202.03	375.8
OP-F-3	3.00	2"	1.450"	0.70	320	147.74	200	372.09	639.87	1,227.63
OP-G-1	4.00	2.5"	0.750"	0.30	20	8.63	20	32.71	50.64	92.48
OP-G-2	4.00	2.5"	1.250"	0.50	100	55.54	100	197.54	317.58	590.91
OP-G-3	4.00	2.5"	1.750"	0.70	320	216.30	200	543.99	936.56	1,798.86
OP-H-1	5.00	3"	0.920"	0.30	20	12.97	20	49.17	76.13	139.06
OP-H-2	5.00	3"	1.500"	0.49	100	79.94	100	282.9	454.77	846.21
OP-H-3	5.00	3"	2.150"	0.70	320	324.16	200	816.7	1,404.95	2,696.28
OP-J-1	7.00	4"	1.200"	0.30	20	22.03	20	83.58	129.44	236.48
OP-J-2	7.00	4"	2.000"	0.50	100	141.51	100	503.76	810.06	1,507.64
OP-J-3	7.00	4"	2.800"	0.70	320	547.11	200	1,380.03	2,373.02	4,553.68
OP-K-1	8.00	5"	1.500"	0.30	20	34.39	20	130.48	202.11	369.29
OP-K-2	8.00	5"	2.500"	0.50	100	220.80	100	786.23	1,264.42	2,353.51
OP-K-3	8.00	5"	3.500"	0.69	320	853.09	200	2,152.83	3,701.57	7,103.22
OP-L-1	10.00	6"	1.800"	0.30	20	49.46	20	187.86	291	531.75
OP-L-2	10.00	6"	3.000"	0.49	100	317.74	100	1,331.63	1,820.05	3,387.93
OP-L-3	10.00	6"	4.200"	0.69	320	1,226.98	200	3,097.20	5,325.20	10,219.28
OP-M-1	14.00	8"	2.400"	0.30	20	87.95	20	333.87	517.25	945.28
OP-M-2	14.00	8"	4.000"	0.50	100	565.77	100	2,014.95	3,241.45	6,034.85
OP-M-3	14.00	8"	5.600"	0.70	320	2,195.86	200	5,532.00	9,525.43	18,290.00
OP-N-1	20.00	10"	3.000"	0.30	20	137.35	20	521.58	808	1,476.77
OP-N-2	20.00	10"	5.000"	0.50	100	883.04	100	3,145.50	5,060.38	9,421.74
OP-N-3	20.00	10"	7.000"	0.70	320	3,421.26	200	8,626.42	14,846.80	28,506.17
OP-O-1	30.00	12"	3.600"	0.30	20	197.73	20	750.9	1,163.44	2,126.47
OP-O-2	30.00	12"	6.000"	0.50	100	1,271.62	100	4,530	7,288.16	13,570.33
OP-O-3	30.00	12"	8.400"	0.70	320	4,930.86	200	12,430.00	21,397.00	41,089.02
OP-P-1	40.00	14"	4.000"	0.30	20	244.14	20	927.14	1,436.59	2,625.81
OP-P-2	40.00	14"	6.600"	0.50	100	1,537.49	100	6,477.67	8,812.87	16,409.42
OP-P-3	40.00	14"	9.300"	0.70	320	6,052.57	200	15,251.50	28,262.66	50,427.78
OP-Q-1	48.00	16"	4.500"	0.30	20	308.76	20	1,172.63	1,817.05	3,321.32
OP-Q-2	48.00	16"	7.600"	0.50	100	2,038.95	100	7,264.58	11,688.26	21,764.08
OP-Q-3	48.00	16"	10.700"	0.70	320	8,007.74	200	20,179.85	34,749.32	66,737.64
OP-R-1	56.00	18"	5.200"	0.30	20	412.26	20	1,565.79	2,426.34	4,435.12
OP-R-2	56.00	18"	8.600"	0.50	100	2,610.71	100	9,302.08	14,966.93	27,869.85
OP-R-3	56.00	18"	12.000"	0.70	320	10,027.37	200	25,299.92	43,535.32	83,587.01
OP-S-1	64.00	20"	5.780"	0.30	20	509.55	20	1,935.37	2,999.11	5,482.22
OP-S-2	64.00	20"	9.600"	0.50	100	3,252.22	100	11,588.20	18,645.74	34,720.84
OP-S-3	64.00	20"	13.500"	0.70	320	12,742.82	200	32,115.34	55,303.34	106,215.88
OP-T-1	78.00	24"	7.000"	0.30	20	747.18	20	2,838.14	4,398.25	8,038.99
OP-T-2	78.00	24"	11.700"	0.50	100	4,835.93	100	17,229.62	27,726.33	51,633.81
OP-T-3	78.00	24"	16.300"	0.70	320	18,572.50	200	46,810.53	80,610.19	154,823.78

Note: Differential pressure values should be less than 50% of the inlet absolute pressure.