Rometec srl - www.rometec.it - Rometec srl - www.rometec.it - Rometec srl - www.rometec.it

Series MTL7706/ 7787

Zener Barrier

Intrinsically Safe Barriers for Hazardous Locations

MTL7787

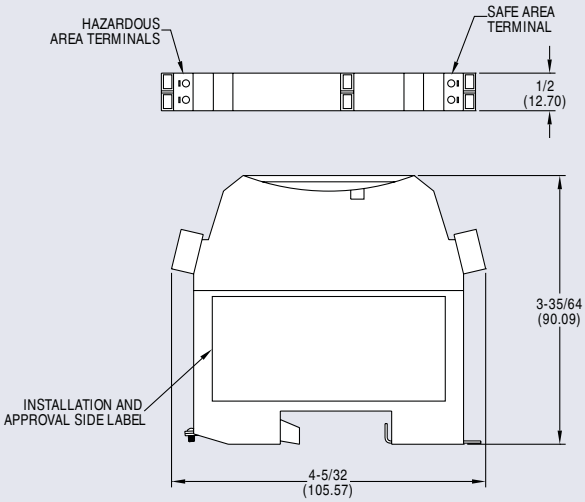

The MTL7706/7787 is an intrinsically safe (IS) shunt-diode barrier that can be used to communicate with and provide isolations for certain Dwyer® transmitters approved for use in hazardous areas. These barriers limit the amount of energy allowed to pass into the hazardous area, which inhibit ignition in flammable atmospheres.

Compatible Models: ***637, 638, 639, 608, 2200***

MTL Zener Barrier	Approval	Dwyer Series
MTL7706	FM for Class I, II, II; Div. 1 Groups C, D, F, G	638
MTL7706	UL for Class I, II, III; Div. 1 & 2 Groups C, D, E, F, G	639
MTL7706	FM for Class I, II, III; Div. 1 Groups B, C, D, E, F, G	637
MTL7706	FM for Class I, II, III; Div. 1 Groups A, B, C, D, E, F, G	608
MTL7787	FM for Class I, II, III; Div. 1 Groups A, B, C, D, E, F, G	2200

MTL7706	FM		
	Group	µF	mH
	A & B	0.083	4.2
	BASEEFA (ATEX)		
	Group	µF	mH
	IIC	0.083	4.2

MTL7787	FM		
	Group	µF	mH
	A & B	0.083	3.05
	BASEEFA (ATEX)		
	Group	µF	mH
	IIC	0.083	3.05

MODELS
MTL7706
MTL7787

SPECIFICATIONS

Transmitter Voltage: 16.2 V at 20 mA with 250Ω load (negative w.r.t. earth); 11.0 V at 20 mA with 500Ω load (negative w.r.t. earth).
Safe Area Output: 4 to 20 mA.
Load Resistance: 0 to 500Ω.
Power Requirement: 20 to 35 VDC w.r.t. earth.
Accuracy: ±2 µA under all conditions.
LED Indicator: Green: Power Indication.
Temperature Limits:
Operating: -4 to 140°F (-20 to 60°C).
Storage: -40 to 176°F (-40 to 80°C).
Humidity: 5 to 95% RH.
Terminals: Accommodate up to 2.5 mm^2 stranded or single-core.
Safety Description: 28 µV, 300Ω, 93 mA.
Weight: 4.9 oz (140 g).
Agency Approvals: See table below.

Region (Authority)	Standard	Approved For	Certificate/file no.
USA (FM)	3600, 3610 entity 3611, 3810	AIS/I,II,III/1/Entity ABCDEFG-SCI-942; NI/I/@ABCD/T4 [I/0] AEx[ia]IIC-SCI-942 Entity; NI/1/2/IIC/T4; Ta=140°F (60°C)	3010737
Canada (CSA)	CAN/CSA E60070, UL698, UL913, UL1604, IEC60079, C22.2	Class I, Div.2, Gps A, B, C, D; Ex nA [iA] IIC T4 Class I, Xone 2, Aex nA IIC T4	1345550
UK (BASEEFA)	EN 50014, EN 50020	EEx ia IIC	BAS01ATEX7217
UK (BASEEFA) Systems	EN 50039	EEx ia IIC	Ex01E2219

Rometec srl - www.rometec.it - Rometec srl - www.rometec.it - Rometec srl - www.rometec.it