Ultra high purity pressure transmitter
Model: PT850 series

Spec. sheet no. PD08-06

Service intended

PT850 series are specially designed for the ultra-high purity gas distribution system used in a semiconductor, electronic, medical, biotechnology and pharmaceutical industry. The transmitter has a water resistant, Stainless steel housing for complete protection from harsh environments. The transmitter offers the convenience and easy installation with the full capabilities of a highly accurate 4~20 mA 2-wire system design. The stainless steel surfaces make it compatible with a wide variety of gases, liquids and can be protected from harsh environment.
It is extremely versatile and suitable for measuring dynamic or static pressure. The pressure to be measured acts through corrosion resistant stainless steel 630 diaphragm with a MEMS Piezoresistive effect sensors which are connected into a Wheatstone bridge.
PT850 series pressure transmitter is electrically temperature compensated.

Model : PT850

Model : PT851

Model : PT852

Model : PT853

Technology
MEMS Piezoresistive effect sensor

Accuracy
±0.25 % of full scale

Operating temperature range
-20 ~ 80 °C

Scale range
Refer to range code

Enclosure rating
min IP 65

Explosion protection
Ex d IIC T6 (Model : PT850)
Ex ia IIC T6...T4 (Model : PT851)
Ex nA IIC T6...T4 (Model : PT852)

Standard features

Mechanical

Pressure connection
Stainless steel 316L electropolished low mount surface finish Ra≤0.13 μm (Ra 5)
- ¼", ⅜", ½" (NPT, PT, PF) male thread
- Male or female face seal fitting
- Flow through type

Material wetted by process
Stainless steel 630 / Hastelloy C22 (Sensor)
Stainless steel 316L (Connection)

Electrical

Input power
12 ~ 24 VDC

Output signal
4 ~ 20 mA
DC 2-wire loop powered technique

Load resistance max
500 Ω at 24 V

Response time (10 ~ 90 %)
≤20 milliseconds

Versione con regolazione zero

Main order — Ordering information

1. Base model

PT850	Explosion-proof enclosure type pressure transmitter
PT851	Intrinsic safety type pressure transmitter
PT852	Non sparking non incendive enclosure type (Symbol : 'n') pressure transmitter
PT853	General type pressure transmitter

2. Sensor material

R	Stainless steel 630
H	Hastelloy C22

3. Connection type

A	Straight female (Swivel face seal)
B	Straight male (Swivel face seal)
C	Flow through female (Swivel face seal)
D	Flow through male (Fixed face seal)
G*	PT thread
H*	NPT thread
I*	PF thread
J	Straight long male (Swivel face seal)
X*	Other type available on request

* Please, contact the WISE before ordering.

4. Connection size

1	9/16"-18 UNF ('A,B,C,D' connection type)
2	¼" (' G,H,I ' connection type)
3	⅜" ('G,H,I' connection type)
4	½" ('G,H,I' connection type)
5	Other units available on request

5. Accuracy

G	± 0.25 % full of scale
S	± 0.25 % full of scale (Special)

6. Unit

A	Calibration in MPa
B	Calibration in bar
K	Calibration in kgf/cm²
P	Calibration in psi (Standard)
Z	Other calibration units available on request

7. Range (psi)

011	-15 ~ 30
012	-15 ~ 60
013	-15 ~ 100
014	-15 ~ 160
015	-15 ~ 200
016	-15 ~ 250
017	-15 ~ 300
018	-15 ~ 350
019	-15 ~ 500
020	-15 ~ 1000
021	-15 ~ 2000
022	-15 ~ 3000
XXX	Other calibration ranges available on request

8. Output signal

C	4 ~ 20 mA Current output signal
X	Other Signals on request

9. Option

0	None (Standard)
1	Accessories

Sample ordering code

1	2	3	4	5	6	7	8	9
PT850	**S**	**B**	**1**	**G**	**P**	**015**	**C**	**0**

WISE®
© WISE Control Inc. All rights reserved. ALL PRODUCT, PRODUCT SPECIFICATIONS AND DATA ARE SUBJECT TO CHANGE WITHOUT NOTICE TO IMPROVE RELIABILITY, FUNCTION OR DESIGN OR OTHERWISE.

Technical Data

Input	
Technology	MEMS Piezoresistive effect sensor
Pressure ranges	-15~30 psi to -15~3000 psi gauge pressure
Pressure reference	Gauge pressure
Overload	2 x full scale without damage (1.5 x full scale / 3000 psi)
Output	
Output signal	4~20 mA DC 2-wire loop powered technique
Full scale output signal	20 mA ± 0.25 %
Zero measured output	4 mA ± 0.25 %
Electrical Specifications	
Excitation voltage	12~40 V DC
Power cunsumption	0.48 W at DC 24 Volt, 20 mA
Load resistance max@24 V	500 Ω at 24 V
Influence of excitation	0.01 % FSO / V
Power ripple	≤ 500 mV P-P
Protection	Against reverse polarity and overvoltage
Shock resistance	150 m/s² half sign wave/18 times
Vibration	10~500 Hz, 0.14 mm, 39.2 m/s²
Response time (10~90 %)	≤ 20 milliseconds
High voltage strength	500 AC V (Wiring versus case)
EMC TEST	**EN 61000-6-2(EMS)**
	IEC 61000-4-2 (Electrostatic discharge (ESD)
	IEC 61000-4-3 (Electromagnetic field)
	IEC 61000-4-4 (Burst)
	IEC 61000-4-5 (Surge)
	IEC 61000-4-6 (Conducted RF)
	IEC 61000-4-8 (Power frequency magnetic field)
	EN 61000-6-4(EMI)
Performance Specifications	
Accuracy	± 0.25 % FSO typical
Non-linearity	± 0.2 % FSO typical
Repeatability	± 0.1 % FSO typical
Pressure hysteresis	± 0.3 % FSO typical
Long term stability	≤ ± 0.1 % FSO over 1 year
Reference temperature	25 ºC
Operating temperature	-20 ~ 80 ºC
Compensated temperature	-20 ~ 60 ºC
Adjustability of Zero Point	± 5 % of span range (Current output signal) * Only available using zero-trim calibrator.
Physical Specifications	
Demension	Refer to " Type of Mounting" in Specification sheet.
Process connection	PT1/4" , PT3/8" , PT1/2" male thread
	NPT1/4" , NPT3/8" , NPT1/2" male thread
	PF1/4" , PF3/8" , PF1/2" male thread
	Swivel male or female face seal fitting
	Flow through
Materials wetted by process	Sensor : Stainless steel 630, Hastelloy C22
	Connection : Stainless steel 316L
Enclosure rating	IP65 , depending on the electrical wiring
Explosion protection and parameter	PT851 : Ex ia IIC T6...T4 (Ui=28 V, Ii=93 mA, Pi=650 mW, Ci=0.078 nF, Li=48 uH)
Influence of mounting position	Not critical

WISE®

Ex d Pressure Monitoring System Typical Installation (PT850)

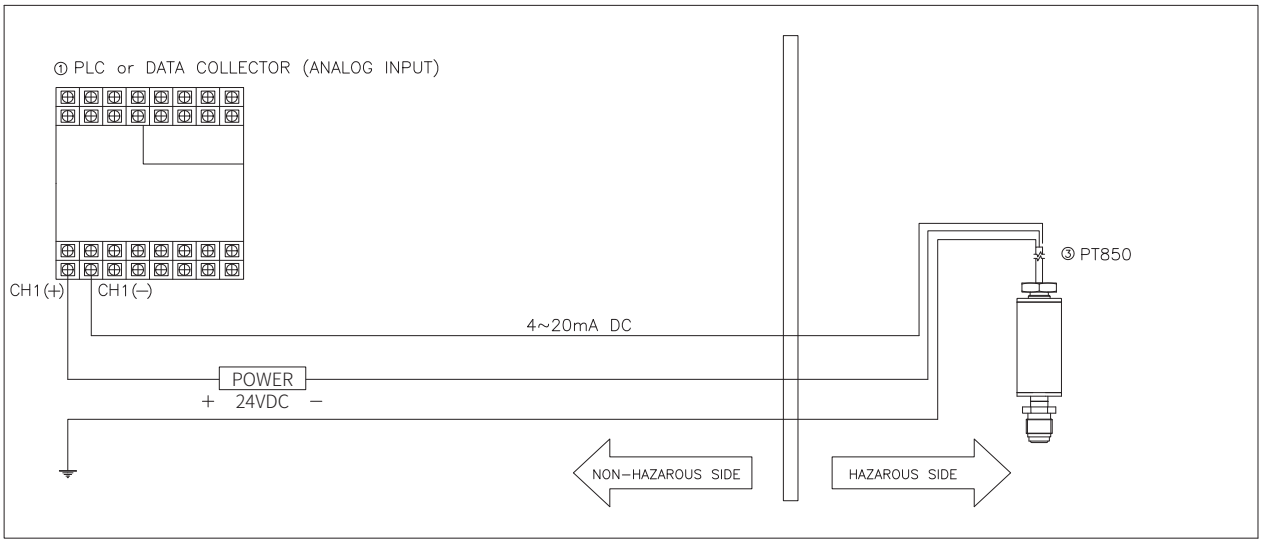

Ex ia Pressure Monitoring System Typical Installation (PT851)

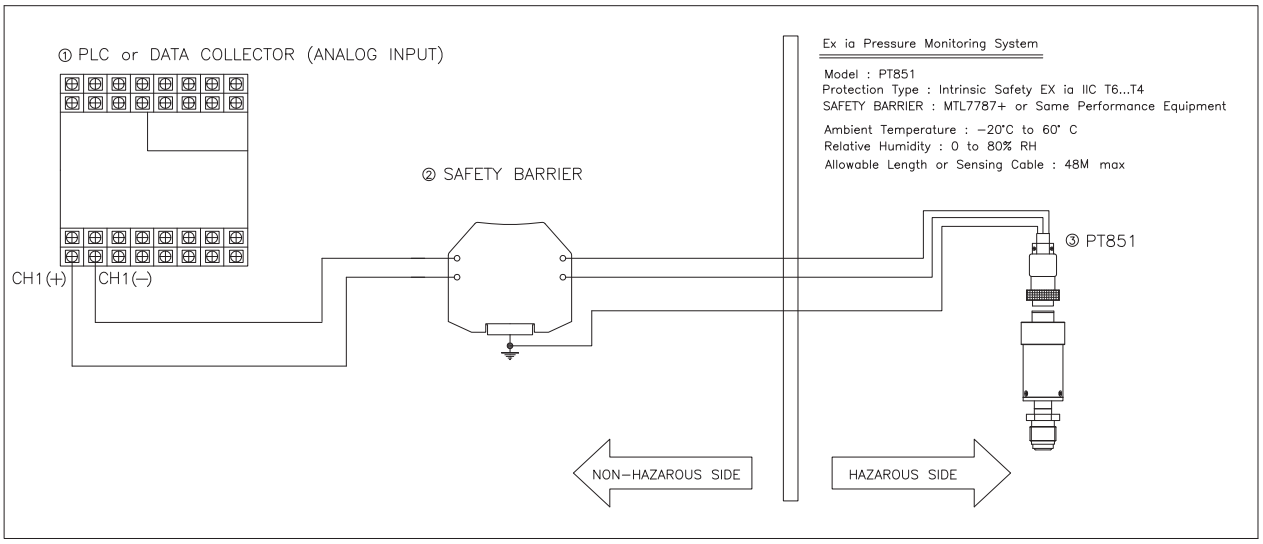

Ex nA Pressure Monitoring System Typical Installation (PT852)
General Type Pressure Monitoring System Typical Installation (PT853)

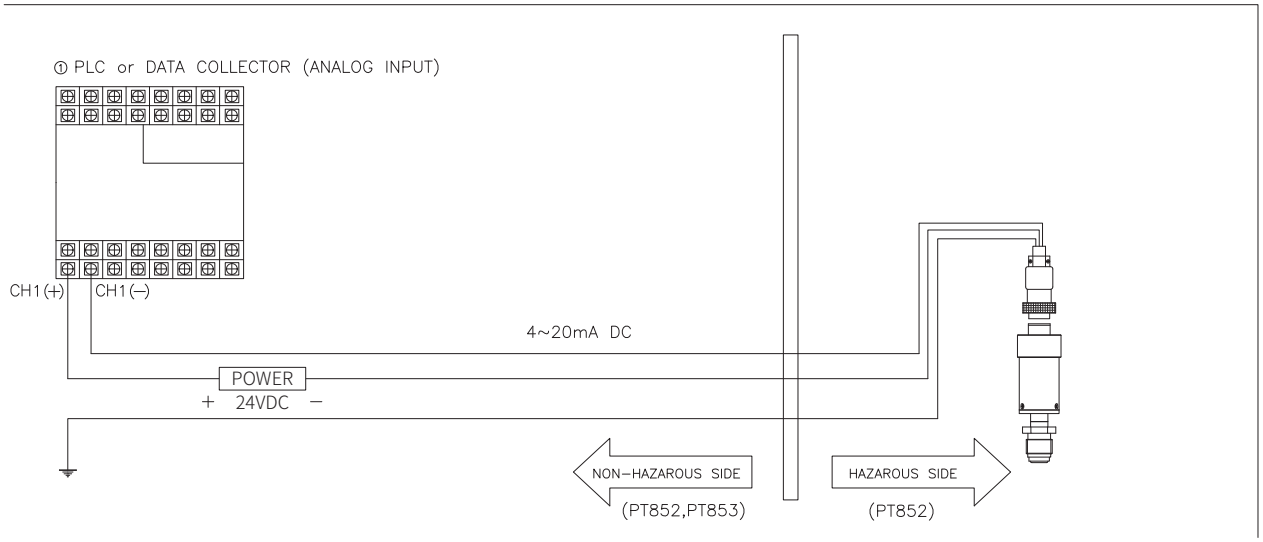

PT850 : Type of mounting (1/2)

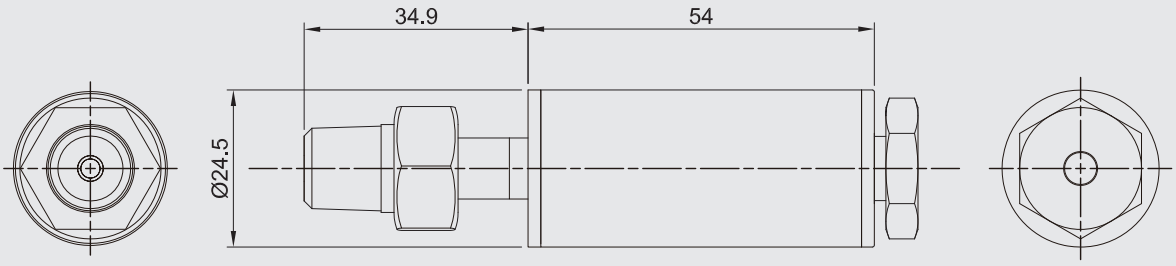

Male Thread Type

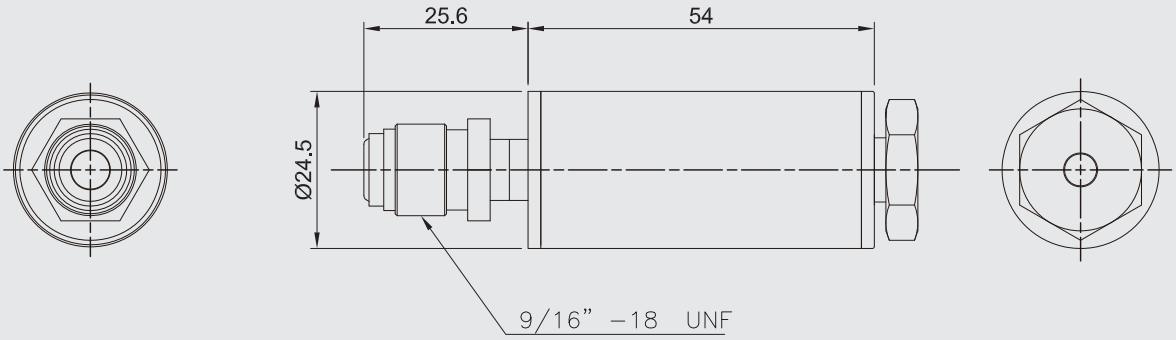

Straight male (Swivel face seal) Type

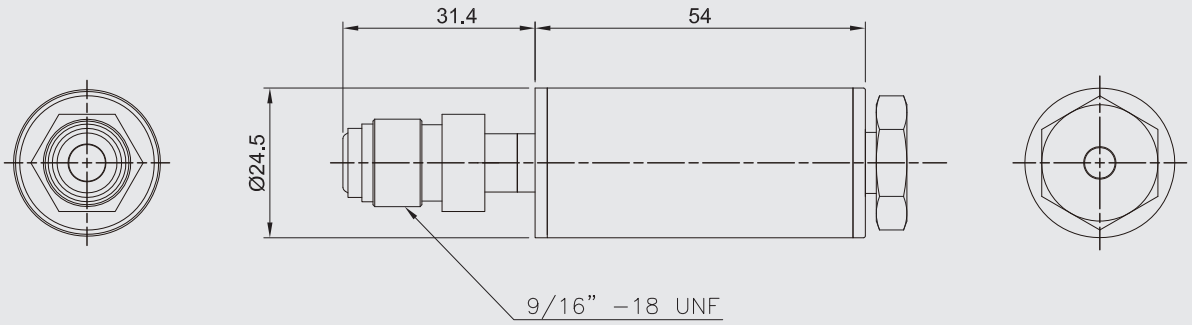

Straight long male (Swivel face seal) Type

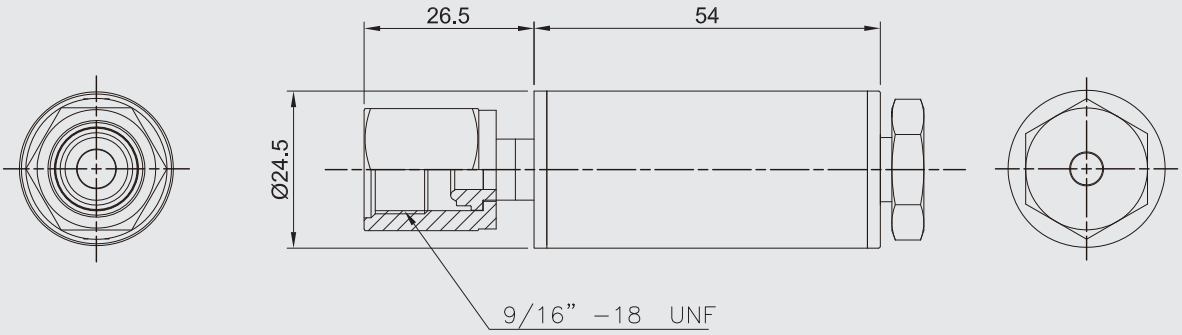

Straight female (Swivel face seal) Type

* Note : Specifications subject to change without notice.

PT850 : Type of mounting (2/2)

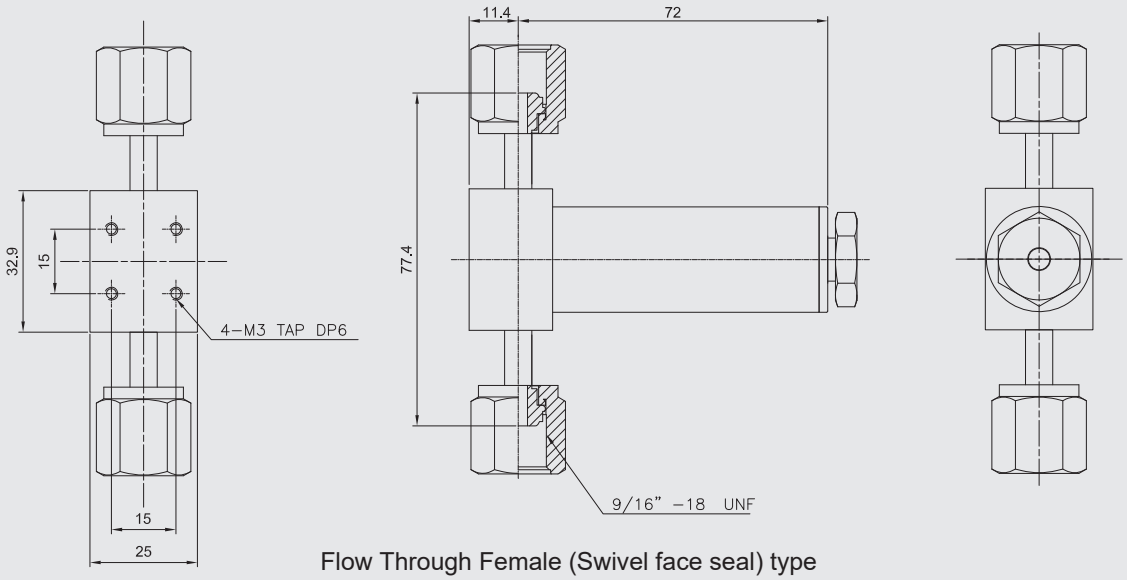

Flow Through Female (Swivel face seal) type

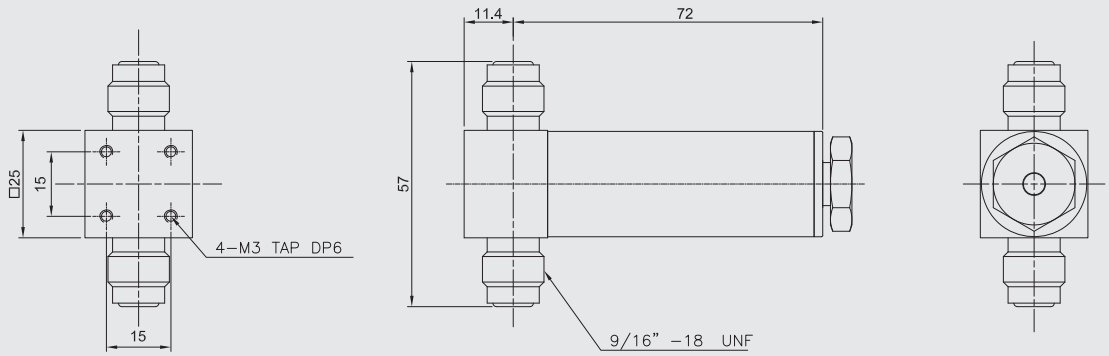

Flow Through Male (Fixed face seal) Type

* Note : Specifications subject to change without notice.

PT851, PT852, PT853 : Type of mounting (1/2)

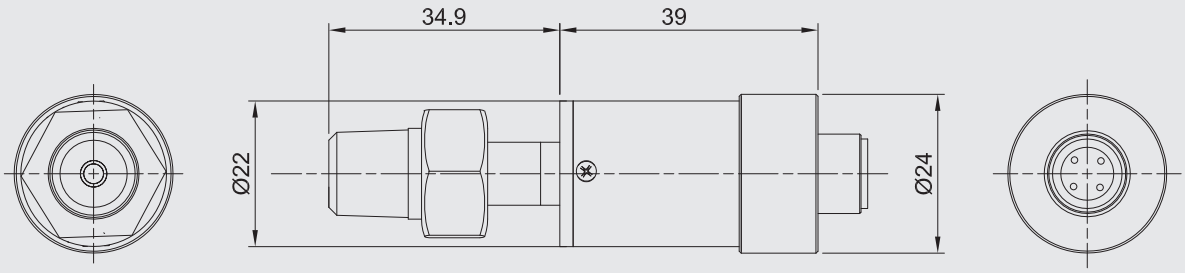

Male Thread Type

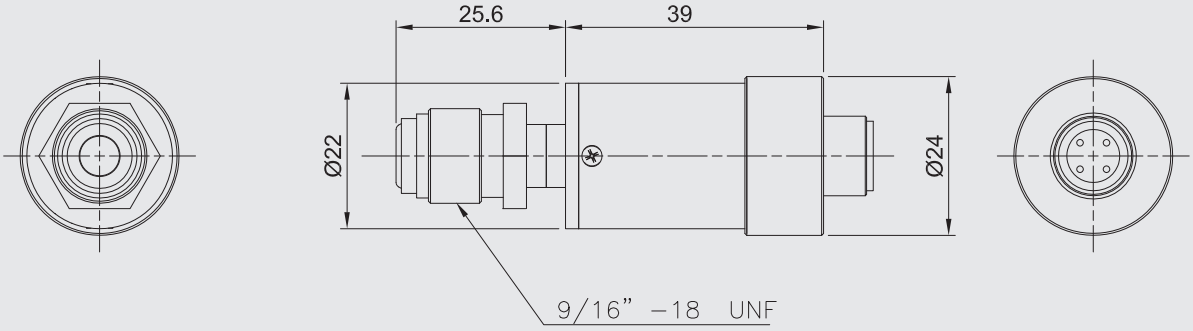

Straight male (Swivel face seal) Type

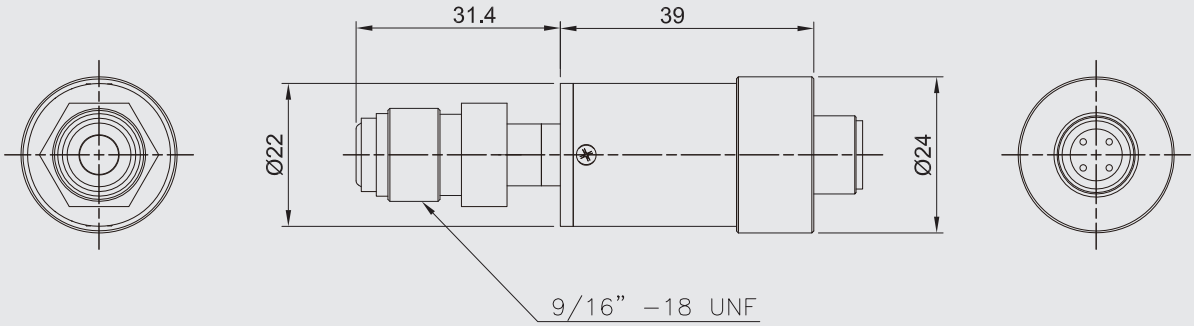

Straight long male (Swivel face seal) Type

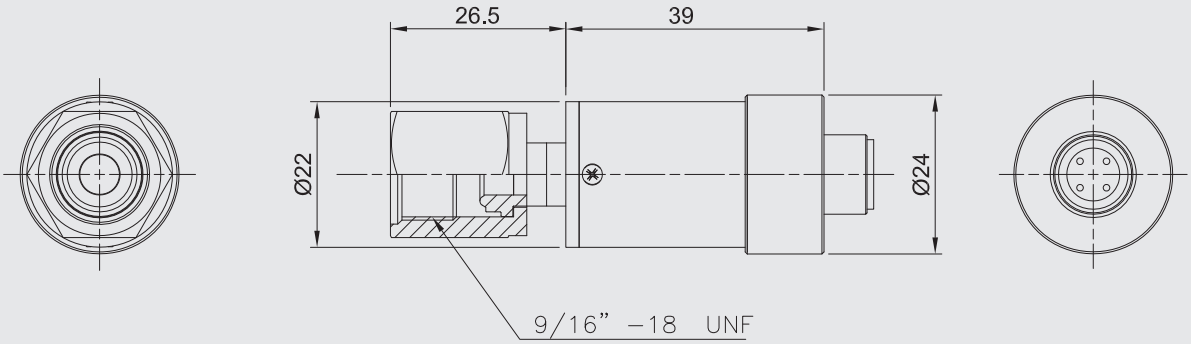

Straight female (Swivel face seal) Type

* Note : Specifications subject to change without notice.

PT851, PT852, PT853 : Type of mounting (2/2)

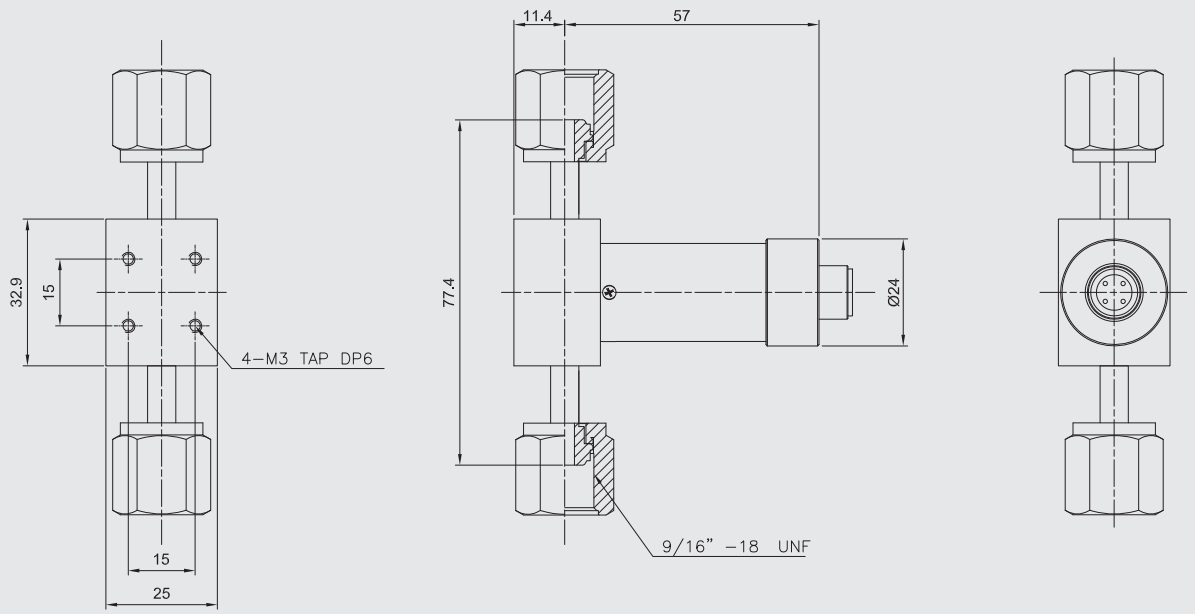

Flow Through Female (Swivel face seal) type

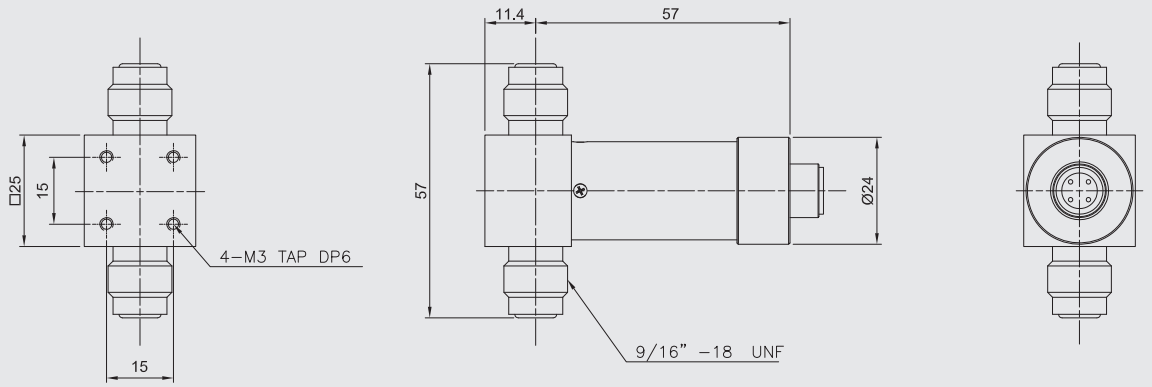

Flow Through Male (Fixed face seal) Type

* Note : Specifications subject to change without notice.