Rometec srl - www.rometec.it - Rometec srl - www.rometec.it - Rometec srl - www.rometec.it

ELECTRIC ACTUATOR SERIES EL-920

Maximum Torque Output inch pounds	Cycle Time 60/50Hz	DUTY CYCLE continous	24 volt	Rated Current Amps/Locked Rotor Amps				Weight Lbs.
				1-Phase		3-Phase		
				120vac	220vac	380vac	440vac	
1302	17/20	50%	2.10/13.00	1.45/2.14	0.71/1.12	0.30/0.61	0.30/0.65	27

MODEL	EL-920
A/FLANGE	3.25" 5.00"
B / TAP	3/8"-16(.47dp) 1/2"-13(.59dp)
A / ISO FLANGE	F-07/2.76" F-10/4.02"
B / ISO TAP Metric	1.25(12dp) 1.50(15dp)
C	1.81
D-MAX* Bore/Key	0.87
D-MAX* ISO star Metric	20mm
E	1.32
F	1.38
G	2.24
H	3.35
I	5.47
J	8.82
K	7.24
L	3.19
M	10.43
N	15.04
O	10.79
P	4.25
Q	2.37
R	8.43
S	

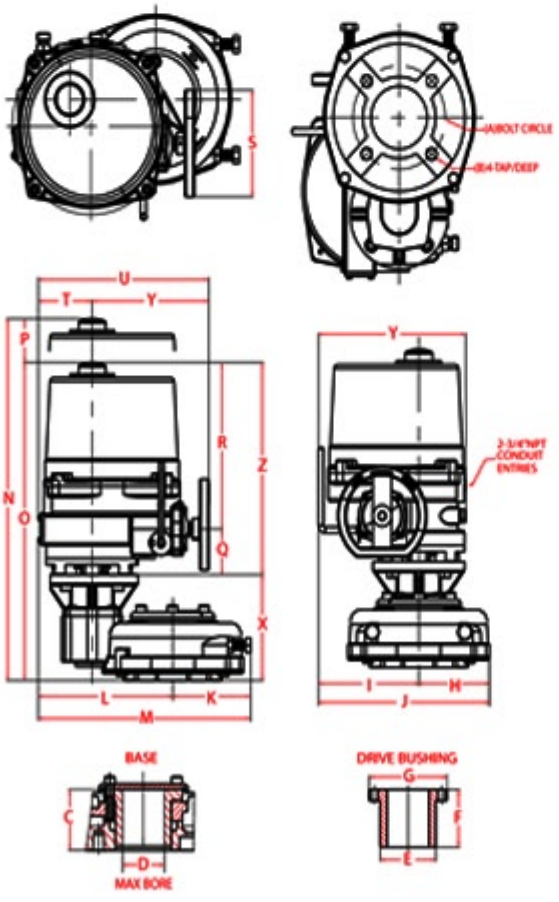

Standard Specifications

Enclosure ..... Watertight IP67, Nema 4, 4x
Ambient Temp. ..... From -20° to +158° Fahrenheit
300° Fahrenheit for 1 hour
Power Supply 120/220VAC 1-Phase
380/440VAC 3-Phase
Control Power 110/220VAC 1-Phase, 60/50Hz
Duty Cycle ..... See Performance Chart
Torque Switches ..... (2) Open/Close

Limit Switches ..... (2) Open/Close, 250 VAC 16A Rating
Stall Protection ..... Internal Thermal Protection
Open 300°F/Close 207°F
Travel Angle ..... 90° ± 5°
Indicator ..... Continuous Position Indicator
Manual Override ..... Hand/Auto Declutching Mechanism
Self Locking ..... Provided by means of Worm Gearing
Mechanical Stops ..... External Adjustable Screws
Space Heater ..... 20Watt (24/120/220 VAC and 24 VDC)
Anti-Condensation
Conduit Entries ..... Two 3/4" NPT.
Lubrication ..... Grease Moly (EP) Type
Materials ..... Steel, Aluminum Alloy,
Aluminum Bronze
Surface Treatment ..... Anodizing

Rometec srl - www.rometec.it - Rometec srl - www.rometec.it - Rometec srl - www.rometec.it