Filters

FT, FB, F and FW Series

Finelok®
Instrumentation Solutions

www.finelok.com

Filtration Definitions

☆ Sintered element: metal powder (alloys are available) is pressed in a die at sufficient pressure that the powder particles adhere at their contact points.
☆ Strainer element: the strainer is cup-shaped and includes an inner cup-shaped support structure having staggered perforations extending through the surfaces thereof, an outer cup-shaped strainer structure constructed of wire mesh is closely received over the support structure
☆ Element nominal pore size: the element nominal pore size is normally calculated from the pressure required to cause air to bubble from the largest pore in the filter element when submerged in a test liquid.

Features

Tee-type Filters

FT Series

☆ Filter element replaceable without removing body from system
☆ Union bonnet design
☆ Nominal pore sizes for sintered element: 0.5, 2, 7, 15, 40, 60 and 80μm
☆ Nominal pore sizes for strainer element: 100, 150, 250 and 450μm
☆ Maximum working pressure: 6000 psig (414 bar)
☆ Working temperature: -20F to 900°F (-28°C to 482°C)
☆ Body materials: 316 SS, 316LSS, 304 SS, 304L SS, 904L SS, and Brass
☆ Variety of end connections available

Bypass Filters

FB Series

☆ Bypass port at filter bottom for the ease of sampling or purging
☆ Union bonnet design
☆ Nominal pore sizes for sintered element: 0.5, 2, 7, 15, 40, 60 and 80μm
☆ Nominal pore sizes for strainer element: 100, 150, 250 and 450μm
☆ Maximum working pressure: 6000 psig (414 bar)
☆ Working temperature: -20F to 900°F (-28°C to 482°C)
☆ Body materials: 316 SS, 316LSS, 304 SS, 304L SS, 904L SS, and Brass
☆ Variety of end connections available

In-line Filters

FI Series

☆ Compact and space-saving design
☆ Nominal pore sizes for sintered element: 0.5, 2, 7, 15, 40, 60 and 80μm
☆ Nominal pore sizes for strainer element: 100, 150, 250 and 450μm
☆ Maximum working pressure: 3000 psig (207 bar)
☆ Working temperature: -20F to 900°F (-28°C to 482°C)
☆ Body materials: 316 SS, 316LSS, 304 SS, 304L SS, 321 SS, 904L SS, and Brass
☆ Variety of end connections available

All-welded In-line Filters

FW Series

☆ Large filtration area and high flow coefficient
☆ All-welded construction for elimination of leakage
☆ Easy cleaning of filters by backflushing
☆ Full-penetration weld between body and element
☆ Nominal pore sizes for sintered element: 0.5, 2, 7, 15, 40, 60 and 80μm
☆ Maximum working pressure: 6000 psig (414 bar)
☆ Working temperature: -20F to 900°F (-28°C to 482°C)
☆ Body materials: 316 SS, 316LSS, 304 SS, 304L SS, and 904L SS
☆ Variety of end connections available

Pressure vs. Temperature

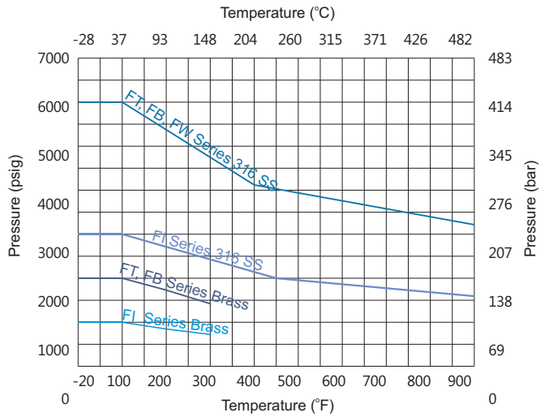

Contact the authorized representative or FINELOK for curve graph of other materials.

FT Series

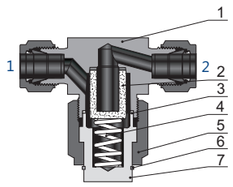

FB Series

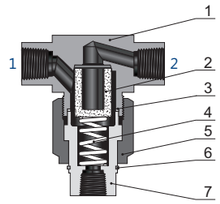

F Series

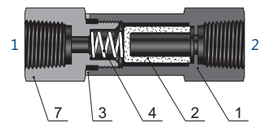

FW Series

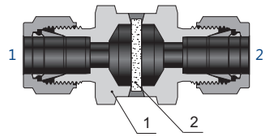

Standard Materials of Construction

Component		Material Grade/ASTM Specification	
		316 SS	Brass
1	Body	316 SS/A479	Brass C36000/B16
2	Element	Sintered 316 SS or strainer 316 SS	Sintered 316 SS or strainer 316 SS
3	Gasket	PTFE/D1710 or silver-plated 316 SS/A240	PTFE/D1710 or aluminum/B209
4	Spring	302 SS/A313	302 SS/A313
5	Bonnet Nut	316 SS/A479	C36000/B16
6	Backup Ring	316 SS/A276	
7	Bonnet	316 SS/A479	C36000/B16

1. FW Series filters not available in brass
2. Lubricants: molybdenum disulfide-based and silicone-based

Maximum Differential Pressure of Clean Filter at 70°F (20°C)

Series	Maximum Differential Pressure psig (bar)										
	0.5 micron	2 micron	7 micron	15 micron	40 micron	60 micron	80 micron	100 micron	150 micron	250 micron	450 micron
FT, FB, F	2250 (155.2)	2250 (155.2)	1950 (134.5)	1750 (120.3)	1150 (79.3)	1150 (79.3)	1000 (68.9)	1000 (68.9)	1000 (68.9)	1000 (68.9)	1000 (68.9)
FW	600 (41.4)	100 (6.9)	100 (6.9)	100 (6.9)	——	——	——	——	——	——	——

Elements

Nominal Pore Size µm	Pore Size Range µm	Element Type
0.5	0.5 to 2	Sintered
2	1 to 4	
7	5 to 10	
15	11 to 25	
40	35 to 53	
60	50 to 75	
80	70 to 95	
100	——	Strainer
150	——	
250	——	
450	——	

Filtration Area

Series	Orifice in. (mm)	Filtration Area in.^{2}(mm^2) Sintered	Filtration Area in.^{2}(mm^2) Strainer
2FT, 2FB	0.094 (2.04)	1.30 (830)	1.00 (640)
4FT, 4FB	0.172 (4.36)	1.30 (830)	1.00 (640)
6FT, 6FB	0.213 (5.41)	2.00 (1280)	1.70 (1090)
8FT, 8FB	0.250 (6.35)	2.00 (1280)	1.70 (1090)
2F	0.094 (2.39)	0.55 (350)	——
4F	0.187 (4.75)	1.30 (830)	1.00 (640)
6F	0.281 (7.14)	2.00 (1280)	1.70 (1090)
8F	0.406 (10.30)	2.00 (1280)	1.70 (1090)
4FW	0.187 (4.75)	0.44 (283)	——

Flow Data at 70°F (20°C)

FT, FB Series

Pressure Drop to Atmosphere Δ p psig (bar)	2 Series Water Flow, U.S. gal (L/min)	2 Series Air Flow, std ft^3/min (std L/min)	4 Series Water Flow, U.S. gal (L/min)	4 Series Air Flow, std ft^3/min (std L/min)	6, 8 Series Water Flow, U.S. gal (L/min)	6, 8 Series Air Flow, std ft^3/min (std L/min)
	0.5 Micron Cv = 0.035		0.5 Micron Cv = 0.035		0.5 Micron Cv = 0.052	
5 (0.34)	0.07 (0.26)	0.40 (11.3)	0.07 (0.26)	0.40 (11.3)	0.11 (0.43)	0.47 (13.3)
10 (0.69)	0.11 (0.42)	0.50 (14.2)	0.11 (0.42)	0.50 (14.2)	0.16 (0.62)	0.74 (21.0)
50 (3.45)	0.25 (0.95)	1.33 (37.7)	0.25 (0.95)	1.33 (37.7)	0.36 (1.38)	1.96 (55.5)
	2 Micron Cv = 0.068		2 Micron Cv = 0.072		2 Micron Cv = 0.096	
5 (0.34)	0.15 (0.56)	0.77 (21.8)	0.16 (0.60)	0.82 (23.2)	0.21 (0.81)	1.09 (30.9)
10 (0.69)	0.22 (0.83)	0.97 (27.5)	0.22 (0.83)	1.02 (28.9)	0.30 (1.14)	1.37 (38.8)
50 (3.45)	0.48 (1.81)	2.58 (73.1)	0.51 (1.93)	2.72 (77.0)	0.67 (2.53)	3.64 (103.1)
	7 Micron Cv = 0.158		7 Micron Cv = 0.165		7 Micron Cv = 0.35	
5 (0.34)	0.35 (1.32)	1.80 (51.0)	0.37 (1.40)	1.88 (53.2)	0.78 (2.96)	4.00 (113.3)
10 (0.69)	0.50 (1.89)	2.25 (63.7)	0.52 (1.96)	2.35 (66.5)	1.10 (4.18)	5.00 (141.6)
50 (3.45)	1.12 (4.22)	5.98 (169.3)	1.16 (4.38)	6.25 (177.0)	2.47 (9.35)	13.30 (376.6)
	15 Micron Cv = 0.19		15 Micron Cv = 0.20		15 Micron Cv = 0.37	
5 (0.34)	0.42 (1.61)	2.16 (61.2)	0.44 (1.66)	2.28 (64.6)	0.82 (3.12)	4.20 (118.9)
10 (0.69)	0.60 (2.27)	2.71 (76.7)	0.63 (2.38)	2.85 (80.7)	0.82 (3.12)	5.28 (149.5)
50 (3.45)	1.34 (5.06)	7.20 (203.9)	1.41 (5.33)	7.58 (214.6)	2.61 (9.88)	14.00 (396.4)
	40 Micron Cv = 0.23		40 Micron Cv = 0.24		40 Micron Cv = 0.42	
5 (0.34)	0.51 (1.94)	2.62 (74.2)	0.54 (2.04)	2.74 (77.6)	0.93 (3.54)	4.80 (135.9)
10 (0.69)	0.73 (2.76)	3.28 (96.8)	0.76 (2.87)	3.42 (96.8)	1.32 (5.02)	6.00 (169.9)
50 (3.45)	1.63 (6.16)	8.74 (247.5)	1.70 (6.42)	9.11 (258.0)	2.96 (11.20)	15.90 (450.2)
	60 Micron Cv = 0.24		60 Micron Cv = 0.25		60 Micron Cv = 0.45	
5 (0.34)	0.54 (2.04)	2.74 (77.6)	0.56 (2.11)	2.85 (80.7)	1.00 (3.78)	5.10 (144.4)
10 (0.69)	0.76 (2.87)	3.42 (96.8)	0.79 (2.98)	3.57 (101.1)	1.42 (5.37)	6.40 (181.2)
50 (3.45)	1.70 (6.42)	9.11 (258.0)	1.77 (6.70)	9.49 (268.7)	3.18 (12.00)	17.00 (481.4)
	80 Micron Cv = 0.25		80 Micron Cv = 0.26		80 Micron Cv = 0.67	
5 (0.34)	0.56 (2.11)	2.85 (80.7)	0.58 (2.19)	2.96 (83.8)	1.49 (5.66)	7.64 (216.3)
10 (0.69)	0.79 (2.98)	3.57 (101.1)	0.82 (3.10)	3.70 (104.8)	2.11 (5.89)	9.55 (270.4)
50 (3.45)	1.77 (6.70)	9.49 (268.7)	1.84 (6.95)	9.80 (277.5)	4.73 (17.90)	25.40 (719.2)
	100 Micron Cv = 0.27		100 Micron Cv = 0.28		100 Micron Cv = 0.72	
5 (0.34)	0.60 (2.27)	3.08 (87.2)	0.62 (2.34)	3.20 (90.6)	1.61 (6.08)	8.20 (232.2)
10 (0.69)	0.85 (3.21)	3.85 (109.0)	0.88 (3.30)	4.00 (113.2)	2.27 (8.61)	10.20 (288.8)
50 (3.45)	1.91 (7.22)	10.20 (288.8)	1.98 (7.48)	5.30 (150.1)	5.09 (19.20)	27.20 (770.2)
	150, 250, 450 Micron Cv = 0.55		150, 250, 450 Micron Cv = 0.58		150, 250, 450 Micron Cv = 0.82	
5 (0.34)	1.23 (4.65)	6.28 (177.8)	1.30 (4.91)	6.60 (186.9)	1.83 (6.93)	9.36 (265.0)
10 (0.69)	1.74 (6.58)	7.85 (222.3)	1.83 (6.91)	8.20 (232.2)	2.59 (9.80)	11.70 (331.3)
50 (3.45)	3.89 (14.70)	20.80 (589.0)	4.10 (15.50)	21.90 (620.1)	5.79 (21.90)	27.20 (770.2)

FI Series

Pressure Drop to Atmosphere Δ p psig (bar)	2 Series Water Flow, U.S. gal (L/min)	2 Series Air Flow, std ft^3/min (std L/min)	4 Series Water Flow, U.S. gal (L/min)	4 Series Air Flow, std ft^3/min (std L/min)	6, 8 Series Water Flow, U.S. gal (L/min)	6, 8 Series Air Flow, std ft^3/min (std L/min)
	0.5 Micron Cv = 0.008		0.5 Micron Cv = 0.038		0.5 Micron Cv = 0.187	
5 (0.34)	0.01 (0.03)	0.09 (2.6)	0.08 (0.30)	0.42 (11.9)	0.41 (1.54)	2.09 (59.2)
10 (0.69)	0.02 (0.07)	0.11 (3.1)	0.12 (0.45)	0.52 (14.7)	0.59 (2.23)	2.56 (72.5)
50 (3.45)	0.05 (0.18)	0.30 (8.5)	0.26 (0.98)	1.42 (40.2)	1.32 (4.98)	6.99 (197.9)
	2 Micron Cv = 0.022		2 Micron Cv = 0.106		2 Micron Cv = 0.374	
5 (0.34)	0.04 (0.15)	0.24 (6.8)	0.23 (0.86)	1.18 (33.4)	0.83 (3.13)	4.20 (118.9)
10 (0.69)	0.06 (0.22)	0.30 (8.5)	0.42 (1.58)	1.45 (41.1)	1.18 (4.46)	5.13 (145.3)
50 (3.45)	0.15 (0.56)	0.82 (23.2)	0.74 (2.79)	3.96 (112.1)	2.64 (9.97)	14.00 (396.4)
	7 Micron Cv = 0.028		7 Micron Cv = 0.112		7 Micron Cv = 0.406	
5 (0.34)	0.06 (0.22)	0.31 (8.7)	0.25 (0.94)	1.26 (35.7)	0.90 (3.40)	4.56 (129.1)
10 (0.69)	0.08 (0.30)	0.38 (10.8)	0.35 (1.32)	1.54 (43.6)	1.28 (4.83)	5.57 (157.7)
50 (3.45)	0.19 (0.71)	1.05 (29.7)	0.79 (2.98)	4.20 (118.9)	2.87 (10.80)	15.20 (430.4)
	15 Micron Cv = 0.096		15 Micron Cv = 0.183		15 Micron Cv = 0.515	
5 (0.34)	0.21 (0.79)	1.08 (30.6)	0.40 (1.51)	2.05 (58.0)	1.15 (4.37)	5.78 (163.7)
10 (0.69)	0.30 (1.13)	1.32 (37.4)	0.57 (2.15)	2.50 (70.8)	1.62 (6.12)	7.07 (200.2)
50 (3.45)	0.67 (2.53)	3.60 (101.9)	1.29 (4.87)	6.80 (192.6)	3.64 (13.70)	19.20 (543.7)
	40 Micron Cv = 0.143		40 Micron Cv = 0.294		40 Micron Cv = 0.678	
5 (0.34)	0.32 (1.20)	1.60 (43.7)	0.65 (2.45)	3.30 (93.4)	1.51 (5.70)	7.72 (218.6)
10 (0.69)	0.45 (1.70)	1.95 (55.2)	0.92 (3.47)	4.03 (114.1)	2.14 (8.08)	9.43 (267.0)
50 (3.45)	1.01 (3.81)	5.34 (151.2)	2.07 (7.82)	11.00 (311.5)	4.79 (18.10)	25.70 (727.7)
	60 Micron Cv = 0.168		60 Micron Cv = 0.325		60 Micron Cv = 0.874	
5 (0.34)	0.37 (1.39)	1.89 (53.5)	0.72 (2.72)	3.57 (101.0)	1.95 (7.37)	9.81 (277.8)
10 (0.69)	0.53 (2.00)	2.31 (65.4)	1.02 (3.85)	4.46 (126.3)	2.76 (10.40)	11.90 (337.0)
50 (3.45)	1.18 (4.46)	6.30 (178.4)	2.29 (8.86)	12.10 (342.6)	6.18 (23.30)	32.70 (926.0)
	80 Micron Cv = 0.198		80 Micron Cv = 0.473		80 Micron Cv = 1.106	
5 (0.34)	0.44 (1.66)	2.22 (62.3)	1.05 (3.96)	5.31 (150.4)	2.47 (9.33)	12.40 (351.1)
10 (0.69)	0.62 (2.34)	2.71 (76.7)	1.49 (5.63)	6.49 (183.8)	3.49 (13.10)	15.10 (427.6)
50 (3.45)	1.40 (5.29)	7.41 (209.8)	3.34 (12.60)	17.70 (501.2)	7.82 (29.50)	41.40 (1172.3)
	100 Micron Cv = 0.220		100 Micron Cv = 0.565		100 Micron Cv = 1.218	
5 (0.34)	0.49 (1.85)	2.47 (69.9)	1.26 (4.76)	6.35 (179.8)	2.72 (10.20)	13.60 (385.1)
10 (0.69)	0.69 (2.60)	3.02 (85.5)	1.78 (6.72)	7.76 (219.7)	3.85 (14.50)	16.70 (472.9)
50 (3.45)	1.55 (5.85)	8.25 (233.6)	3.99 (15.00)	21.10 (597.5)	8.61 (32.50)	45.60 (1291.2)
	150, 250, 450 Micron Cv =0.264		150, 250, 450 Micron Cv = 0.780		150, 250, 450 Micron Cv = 2.413	
5 (0.34)	0.59 (2.23)	2.97 (84.1)	1.74 (6.57)	8.70 (246.3)	5.39 (20.30)	27.00 (764.6)
10 (0.69)	0.83 (3.13)	3.63 (102.8)	2.46 (9.29)	10.70 (303.0)	7.63 (28.80)	33.10 (937.3)
50 (3.45)	1.86 (7.03)	9.90 (280.3)	5.51 (20.80)	29.20 (826.9)	17.00 (64.20)	90.30 (2557.0)

FW Series

Pressure Drop to Atmosphere Δ p psig (bar)	4 Series	
	Water Flow, U.S. gal (L/min)	Air Flow, std ft³/min (std L/min)
	0.5 Micron Cv = 0.008	
5 (0.34)	0.01 (0.03)	0.09 (2.6)
10 (0.69)	0.02 (0.07)	0.11 (3.1)
50 (3.45)	0.05 (0.18)	0.30 (8.5)
	2 Micron Cv = 0.42	
5 (0.34)	0.93 (3.50)	4.72 (133.7)
10 (0.69)	1.32 (4.98)	5.77 (163.4)
50 (3.45)	2.96 (11.10)	15.70 (444.6)
	7 Micron Cv = 0.45	
5 (0.34)	1.00 (3.78)	5.04 (142.7)
10 (0.69)	1.42 (5.36)	6.16 (174.4)
50 (3.45)	3.18 (12.00)	16.80 (475.7)
	15 Micron Cv = 0.76	
5 (0.34)	1.69 (6.22)	8.55 (242.1)
10 (0.69)	2.40 (9.07)	10.40 (294.5)
50 (3.45)	5.37 (20.30)	28.50 (807.0)

Dimensions

FT Series

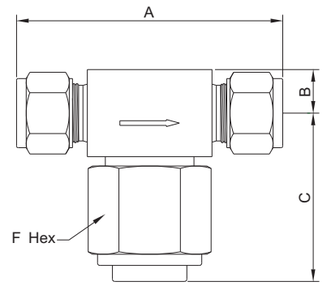

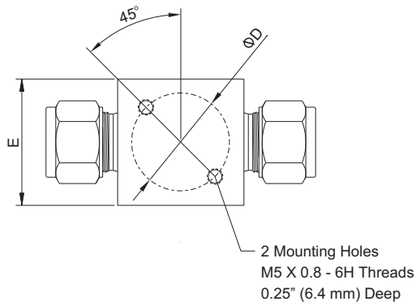

Basic Ordering Number	Connection Type and Size		Element Series	Dimension, in. (mm)					
	Inlet	Outlet		A	B	C	ΦD	E	F
-FT-S2-	1/8" FINELOK	1/8" FINELOK	2	2.27 (57.7)	0.38 (9.7)	1.49 (37.8)	1.00 (25.4)	1.00 (25.4)	1 (25.4)
-FT-S4-	1/4" FINELOK	1/4" FINELOK	4	2.47 (62.7)					
-FT-S6-	3/8" FINELOK	3/8" FINELOK	6	2.84 (72.1)	0.46 (11.7)	1.74 (44.2)	1.13 (28.7)	1.13 (28.7)	1 1/8 (28.6)
-FT-S8-	1/2" FINELOK	1/2" FINELOK	8	3.04 (77.2)					
-FT-SM6-	6 mm FINELOK	6 mm FINELOK	4	2.46 (62.5)	0.38 (9.7)	1.49 (37.8)	1.00 (25.4)	1.00 (25.4)	1 (25.4)
-FT-SM8-	8 mm FINELOK	8 mm FINELOK	6	2.84 (72.1)	0.46 (11.7)	1.74 (44.2)	1.13 (28.7)	1.13 (28.7)	1 1/8 (28.6)
-FT-SM10-	10 mm FINELOK	10 mm FINELOK	8	2.86 (72.6)					
-FT-SM12-	12 mm FINELOK	12 mm FINELOK	8	3.04 (77.2)					
-FT-FS4-	1/4" FS	1/4" FS	4	1.68 (42.7)	0.38 (9.7)	1.49 (37.8)	1.00 (25.4)	1.00 (25.4)	1 (25.4)
-FT-FS6-	3/8" FS	3/8" FS	4						
-FT-FB4-	1/4" FB	1/4" FB	4						
-FT-FB6-	3/8" FB	3/8" FB	4						
-FT-FNT2-	1/8 Female NPT	1/8 Female NPT	2	2.00 (50.8)					
-FT-FNT4-	1/4 Female NPT	1/4 Female NPT	4	2.13 (54.1)					
-FT-NT4-	1/4 Male NPT	1/4 Male NPT	4						
-FT-NT6-	3/8 Male NPT	3/8 Male NPT	6	2.38 (60.5)	0.46 (11.7)	1.74 (44.2)	1.13 (28.7)	1.13 (28.7)	1 1/8 (28.6)
-FT-NT8-	1/2 Male NPT	1/2 Male NPT	8	2.75 (69.9)					
-FT-CR4-	1/4 Male CR	1/4 Male CR	4	2.30 (58.4)	0.38 (9.7)	1.49 (37.8)	1.00 (25.4)	1.00 (25.4)	1 (25.4)
-FT-CR8-	1/2 Male CR	1/2 Male CR	8	2.55 (64.8)	0.46 (11.7)	1.74 (44.2)	1.13 (28.7)	1.13 (28.7)	1 1/8 (28.6)

Mounting holes not available with 1/4 female NPT end connections

FB Series

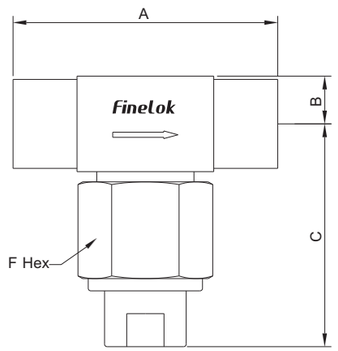

Bypass Port

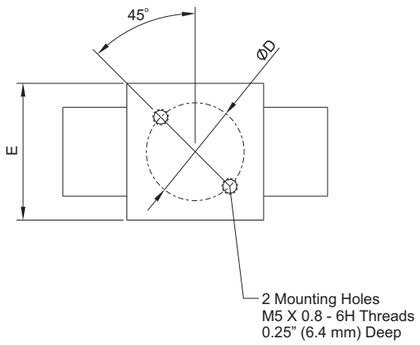

Basic Ordering Number	Connection Type and Size		Element Series	Dimension, in. (mm)					
	Inlet	Outlet		A	B	C	ØD	E	F
-FB-S2-	1/8" FINELOK	1/8" FINELOK	2	2.27 (57.7)	0.38 (9.7)	1.98 (50.2)	1.00 (25.4)	1.00 (25.4)	1 (25.4)
-FB-S4-	1/4" FINELOK	1/4" FINELOK	4	2.47 (62.7)		2.44 (61.9)			
-FB-S6-	3/8" FINELOK	3/8" FINELOK	6	2.84 (72.1)	0.46 (11.7)	2.74 (69.1)	1.13 (28.7)	1.13 (28.7)	1 1/8 (28.6)
-FB-S8-	½" FINELOK	½" FINELOK	8	3.04 (77.2)		2.96 (74.2)			
-FB-SM6-	6 mm FINELOK	6 mm FINELOK	4	2.46 (62.5)	0.38 (9.7)	2.44 (61.9)	1.00 (25.4)	1.00 (25.4)	1 (25.4)
-FB-SM8-	8 mm FINELOK	8 mm FINELOK	6	2.84 (72.1)	0.46 (11.7)	2.74 (69.1)	1.13 (28.7)	1.13 (28.7)	1 1/8 (28.6)
-FB-SM10-	10 mm FINELOK	10 mm FINELOK	8	2.86 (72.6)		2.96 (74.2)			
-FB-SM12-	12 mm FINELOK	12 mm FINELOK	8	3.04 (77.2)					
-FB-FS4-	1/4" FS	1/4" FS	4	1.68 (42.7)	0.38 (9.7)	1.83 (56.4)	1.00 (25.4)	1.00 (25.4)	1 (25.4)
-FB-FS6-	3/8" FS	3/8" FS	4						
-FB-FB4-	1/4" FB	1/4" FB	4						
-FB-FB6-	3/8" FB	3/8" FB	4						
-FB-FNT2-	1/8 Female NPT	1/8 Female NPT	2	2.00 (50.8)		1.71 (43.4)			
-FB-FNT4-	1/4 Female NPT	1/4 Female NPT	4	2.13 (54.1)					
-FB-NT4-	1/4 Male NPT	1/4 Male NPT	4						
-FB-NT6-	3/8 Male NPT	3/8 Male NPT	6	2.38 (60.5)	0.46 (11.7)	2.00 (50.8)	1.13 (28.7)	1.13 (28.7)	1 1/8 (28.6)
-FB-NT8-	1/2 Male NPT	1/2 Male NPT	8	2.75 (69.9)					
-FB-CR4-	1/4 Male CR	1/4 Male CR	4	2.38 (60.5)	0.38 (9.7)	2.44 (61.9)	1.00 (25.4)	1.00 (25.4)	1 (25.4)
-FB-CR8-	½ Male CR	½ Male CR	8	2.75 (69.9)	0.46 (11.7)	2.96 (74.2)	1.13 (28.7)	1.13 (28.7)	1 1/8 (28.6)

Mounting holes not available with 1/4 female NPT end connections

FI Series

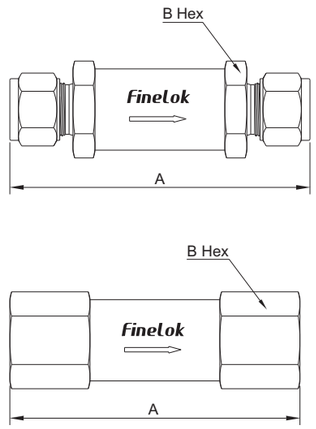

Basic Ordering Number	Connection Type and Size		Element Series	Dimension, in. (mm)	
	Inlet	Outlet		A	B
–F-S2-	1/8" FINELOK	1/8" FINELOK	2	2.35 (59.7)	9/16 (14.3)
–F-S4-	1/4" FINELOK	1/4" FINELOK	4	2.95 (74.9)	3/4 (19.0)
–F-S6-	3/8" FINELOK	3/8" FINELOK	6	3.21 (81.5)	1 (25.4)
–F-S8-	½" FINELOK	½" FINELOK	8	3.49 (88.6)	
–F-SM3-	3 mm FINELOK	3 mm FINELOK	2	2.38 (60.5)	9/16 (14.3)
–F-SM6-	6 mm FINELOK	6 mm FINELOK	4	2.96 (75.2)	3/4 (19.0)
–F-FNT2-	1/8 Female NPT	1/8 Female NPT	2	2.16 (54.9)	9/16 (14.3)
–F-FNT4-	1/4 Female NPT	1/4 Female NPT	4	2.87 (72.9)	3/4 (19.0)
–F-NT2-	1/8 Male NPT	1/8 Male NPT	2	1.88 (47.7)	9/16 (14.3)
–F-NT4-	1/4 Male NPT	1/4 Male NPT	4	2.69 (68.3)	3/4 (19.0)
–F-CR2-	1/8 Male CR	1/8 Male CR	2	2.79 (70.8)	
–F-CR4-	1/4 Male CR	1/4 Male CR	4		
–F-FRT2-	1/8 Female BSPT	1/8 Female BSPT	2	2.16 (54.9)	9/16 (14.3)
–F-FRT4-	1/4 Female BSPT	1/4 Female BSPT	4	2.87 (72.9)	3/4 (19.0)
–F-RT2-	1/8 Male BSPT	1/8 Male BSPT	2	1.88 (47.7)	9/16 (14.3)
–F-RT4-	1/4 Male BSPT	1/4 Male BSPT	4	2.69 (68.3)	3/4 (19.0)

FW Series

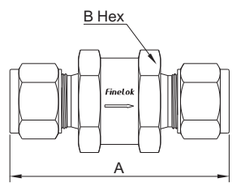

Basic Ordering Number	Connection Type and Size		Orifice in. (mm)	Dimension, in. (mm)	
	Inlet	Outlet		A	B
-FW-S4-	1/4" FINELOK	1/4" FINELOK	0.187(4.75)	2.15(54.6)	1 (25.4)
–FW-SM6-	6 mm FINELOK	6 mm FINELOK			
–FW-FNT4-	1/4 Female NPT	1/4 Female NPT	0.453(11.5)	1.57(39.9)	
–FW-NT4-	1/4 Male NPT	1/4 Male NPT	0.281(7.14)	1.89(48.0)	
–FW-CR4-	1/4 Male CR	1/4 Male CR	0.187(4.75)	2.04(51.8)	

1. FINELOK means FINELOK double ferrule tube fittings, CR means metal gasket seal fittings, FS means fractional tube socket weld, FB means fractional tube butt weld.
2. Sizes and types listed are standard. Other sizes and types are available upon request.
3. Dimensions are shown with FINELOK nuts finger-tightened. All dimensions are for reference only and are subject to change. For dimensions not shown above, please contact the authorized representative or FINELOK.

Filters Ordering Information

SS – FB – S8 – SM10 – S – P150 – S4S

Body Material	
SS	316 SS
6L	316L SS
S4	304 SS
4L	304L SS
S1	321 SS
B	Brass
904L	904L SS

Series
FT
FB
F
FW

Inlet Type	
FNT	Female NPT
NT	Male NPT
FRT	Female BSPT
RT	Male BSPT
FMS	Female Metric Thread (for RP)
MS	Male Metric Thread (for RG)
FRP	Female BSPP (for RP)
BP	Male BSPP (for RG)
S	Fractional Tube Fitting
SM	Metric Tube Fitting
FS	Fractional Tube Socket Weld
FB	Fractional Tube Butt Weld
CR	Male CR Fitting

Inlet Size	
2	1/8"
4	1/4"
6	3/8" or 6 mm
8	1/2" or 8 mm
10	10 mm
12	3/4" or 12 mm
14	14 mm or M14 x 1.5
16	1" or 16 mm
18	18 mm
20	1 1/4" or 20 mm or M20 x 1.5
22	22 mm or M22 x 1.5
25	25 mm

Outlet Type / Outlet Size	
	Same as Inlet
Specified in the same way as the inlet type and size	

Element Type	
	Sintered
S	Strainer

Gasket Material	
	Silver-plated 316 SS for FT, FB, F
P	PTFE-plated 316 SS for FT, FB, F
A	Aluminum for FT, FB, F

Element Nominal Pore Size	
05	0.5 µm
2	2 µm
7	7 µm
15	15 µm
40	40 µm
60	60 µm
80	80 µm
100	100 µm
150	150 µm
250	250 µm
450	450 µm

Bypass Port (for FB Series Only)	
	1/8 Female NPT
FL2	1/8" Fractional Tube Fitting
FL4	1/4" Fractional Tube Fitting
TS4	1/4" Tube Socket Weld
FL6	3/8" Fractional Tube Fitting
FL8	1/2" Fractional Tube Fitting

Special Application	
	No
S	NACE MR0175

1. Standard thread pitch for metric threads are as follows:
   M10 and below: 1 mm
   M12 to M24: 1.5 mm
   M27 and above: 2 mm
   Standard thread pitch should be ignored in the ordering number, others should be specified.

Elements Ordering Information

SS – E – SN8 – 60

Material	
SS	316 SS

Part Name	
E	Element

Element Type	
SN	Sintered
ST	Strainer

Element Series
2 (only for sintered)
4
8

Element Nominal Pore Size	
05	0.5 µm
2	2 µm
7	7 µm
15	15 µm
40	40 µm
60	60 µm
80	80 µm
100	100 µm
150	150 µm
250	250 µm
450	450 µm