Rometec srl - www.rometec.it - Rometec srl - www.rometec.it - Rometec srl - www.rometec.it

Shear beam sensor

GSB200

Main features

Alloy steel & stainless structure; bellows hermetically sealed by laser, nickel plated, waterproof and anti-corrosion, suitable for multiform environments; suitable for electronic platform scales, hopper scales, and other electronic weighing devies.

Load Instruction

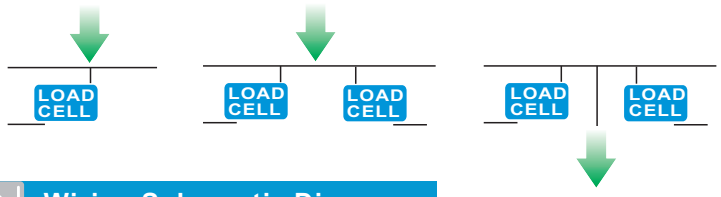

Wiring Schematic Diagram

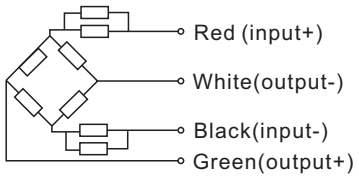

Installation size (mm):

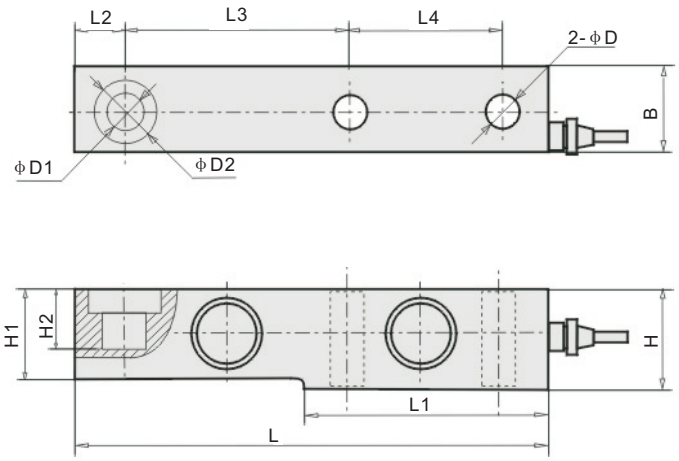

Rated load(kg)	L	L1	L2	L3	L4	D	D1	D2	H	H1	H2	B
500--3000	203	95	22	98	64	13	16	32	43	37	30	37
5000	235	110	22	124	66	21	22	38	52	48	30	48
10000	279	133	32	140	82	28	32	48	67	60	20	60
20000	318	153	38	159	89	34	38	54	82	70	24	70

Parameters:		Range	500kg～20000kg
Precison	C2 & C3	Temp. effect on span(%F.S/10℃)	±0.017& ±0.011
Comprehensive error(%F.S)	±0.03 & ±0.02	Temp. effect on zero(%F.S/10℃)	±0.023 & ±0.015
Rated output(mv/v)	3.0±0.003	Compensated temp. range(℃)	-10～+40
Creep(%F.S/30min)	±0.024 & ±0.016	Use temp. range(℃)	-20～+55
Zero balance(%F.S)	±1.0	Excitation voltage(V)	9～12(DC)
Input resistance(Ω)	350±5	Safe overload (%F.S)	150
Output resistance(Ω)	350±3	Ultimate overload (%F.S)	200
Insulation resistance(MΩ)	⩾5000(100VDC)	Defend grade	IP66

Xi 'an Gavin Electronic Technology Co., Ltd. T: +86 029-81292510 E: sales@galoce.com W: www.galoce.com

Rometec srl - www.rometec.it - Rometec srl - www.rometec.it - Rometec srl - www.rometec.it

WEIGHING IS BELIEVING
Rometec srl - www.rometec.it - Rometec srl - www.rometec.it - Rometec srl - www.rometec.it

Shear Beam Sensor

GSB211

Main features

Alloy steel & stainless structure; bellows hermetically sealed by laser, nickel plated, waterproof and anti-corrosion, suitable for multiform environments; suitable for electronic platform scales, hopper scales, and other electronic weighing devies.

Installation size (mm):

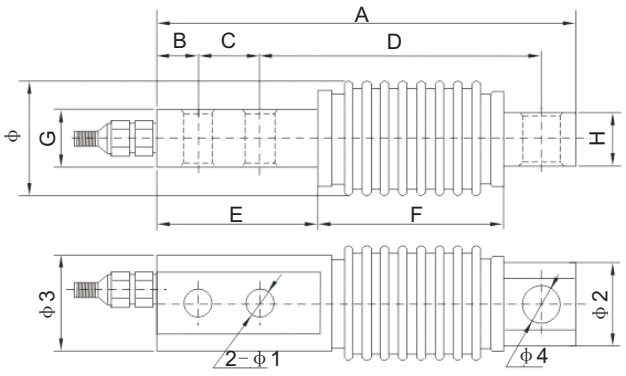

Load Instruction

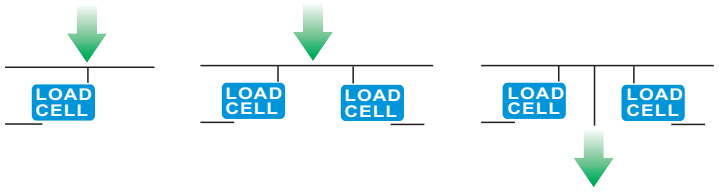

Wiring Schematic Diagram

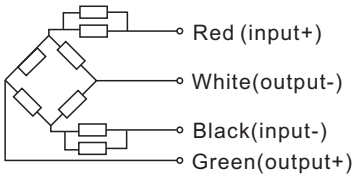

Rated load(kg)	Size												
	A	B	C	D	E	F	G	H	Φ	Φ1	Φ2	Φ3	Φ4
10~500	123	13	18	82	45	59	22	20	45	8.5	27	32	11

Parameters:

Range : 10,20,30,50,100,200,500(kg)			
Precison	C3	Insulation resistance(MΩ)	⩾5000
Comprehensive error(%F.S)	±0.02	Temp. effect on span(%F.S/10℃)	±0.02
Rated output(mv/v)	2.0	Temp. effect on zero(%F.S/10℃)	±0.02
Creep(%F.S/30min)	±0.02	Use temp. range(℃)	-20～+65
Zero balance(%F.S)	±1.0	Excitation voltage(V)	9～12(DC)
Input resistance(Ω)	380±10	Safe overload (%F.S)	120
Output resistance(Ω)	350±3	Ultimate overload (%F.S)	150

Xi 'an Gavin Electronic Technology Co., Ltd. T : +86 029-81292510 E : sales@galoce.com W : www.galoce .com

Rometec srl - www.rometec.it - Rometec srl - www.rometec.it - Rometec srl - www.rometec.it

Rometec srl - www.rometec.it - Rometec srl - www.rometec.it - Rometec srl - www.rometec.it

Shearing beam load cell

GSB205

Installation size (mm):

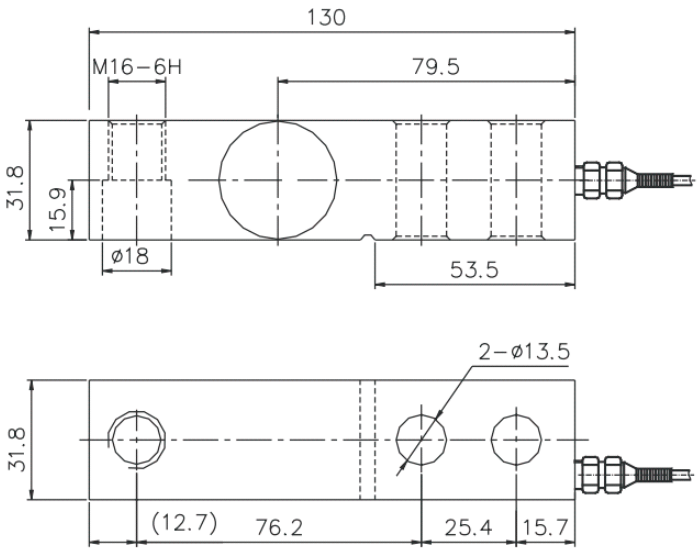

Product features

1.Hermetically sealed by laser,nickel plated,waterproof And anti-corrosion,suitable for multiform environments;

2.Suitable for electronic platform scales,truck scale,floor Scale and other electronic weighing devices.

Parameters

Rated load： 100、200、300、500、1000、2000、3000kg	
Accuracy class： C3	Insulation resistance：≧5000MΩ(50VDC)
Rated output： 2.0±0.004mV/V	Excitation voltage：5～12VDC
Comprehensive error：≤±0.02%F.S	Compensated temp.range：-10～+40℃
Creep：0.02%F.S/30min	Use temp.range：-35～+80℃
Zero balance： ±1.0%F.S	Safe overload： 150%
Temperature effect on sensitivity： 0.016%F.S/℃	Ultimate overload： 200%
Temperature effect on zero：0.002%F.S/℃	Load cell material： Alloy steel
Input resistance：365±10Ω	Defend grade：IP67
Output resistance： 350±3Ω	Cable： Φ5.7mm*2m

Xi 'an Gavin Electronic Technology Co., Ltd. T：+86 029-81292510 E：sales@galoce.com W：www.galoce.com

Rometec srl - www.rometec.it - Rometec srl - www.rometec.it - Rometec srl - www.rometec.it