Parker Instrumentation

Relief Valves (RH4 Series)

Catalog 4131-RH
Revised, April 2001

Introduction

Parker RH4 Relief Valves are designed such that when the upstream pressure exceeds the closing force exerted by the spring, the lower stem opens, permitting flow through the valve. Flow through the valve increases proportionately to the increase in upstream pressure.

Features

- Pressure settings are externally adjustable while the valve is in operation. Eight different spring ranges provide greater system sensitivity and enhanced performance.
- Captured molded seat design is blow-out and chip resistant.
- Manual Override option with positive stem retraction is available for pressures up to 1500 psig (103 bar). This option permits the user to relieve upstream pressure while maintaining the predetermined cracking pressure.
- Standard low friction synergistic coating of body bonnet improves crack and re-seal performance.
- Color coded springs and labels indicate spring cracking range.
- Back pressure has minimum effect on cracking pressure.
- Lock wire feature secures a given pressure setting.

Specifications

- **Working pressure:**
  Up to 6000 psig (414 bar) CWP.
  Up to 8000 psig (552 bar) during relief with no internal seal damage.
- **Cracking pressure:**
  Eight springs, from 50 psig to 6000 psig in the following ranges: 50-350 psig, 350-750 psig, 750-1500 psig, 1500-2250 psig, 2250-3000 psig, 3000-4000 psig, 4000-5000 psig, 5000-6000 psig (See table on page 3 for bar equivalents).
- **Temperature Rating:**
  Buna-N Rubber
  –30 °F to 225 °F (–34 °C to 107 °C)
  Highly Fluorinated Fluorocarbon Rubber
  –20 °F to 200 °F (–29 °C to 93 °C)
  Ethylene Propylene Rubber
  –70 °F to 275 °F (–57 °C to 135 °C)
  Fluorocarbon Rubber
  –10 °F to 400 °F (–23 °C to 204 °C)
  Neoprene Rubber
  –45 °F to 250 °F (–43 °C to 121 °C)

Flow Calculations

Inlet Pressure		Pressure Drop Δ P		Water @ 60 °F (16 °C)		Air @ 60 °F (16 °C)	
psig	bar	psig	bar	gpm	m³/hr	scfm	m³/hr
100	7	1	0.1	0.4	0.1	4.3	7.0
		10	0.7	1.3	0.3	13.2	21.0
		50	3.5	2.9	0.7	24.2	37.3
1000	69	10	0.7	1.3	0.3	40.9	69.0
		100	6.9	4.1	0.9	123.5	208.4
		500	34.5	9.2	2.1	219.1	368.6
3000	207	100	6.9	4.1	0.9	220.1	373.5
		1000	69.0	13.0	2.9	590.8	1002.4
		1500	103.4	15.9	3.6	652.1	1105.7
6000	413	1000	69.0	13.0	2.9	916.8	1556.2
		2000	137.9	18.3	4.2	1179.7	2001.3
		3000	206.8	22.5	5.1	1301.6	2207.0

Available End Connections

Z-Single ferrule CPI™ compression port

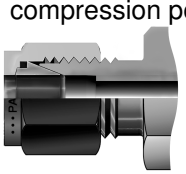

A-Two ferrule A-LOK® compression port

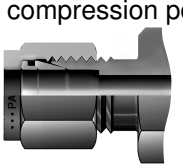

M-ANSI/ASME B1.20.1, External pipe threads

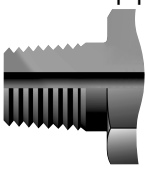

F-ANSI/ASME B1.20.1, Internal pipe threads

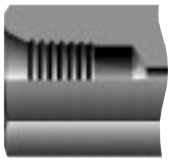

KM -British Standard BS 21 (ISO 7-1), External pipe threads

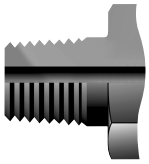

KF -British Standard BS 21 (ISO 7-1), Internal pipe threads

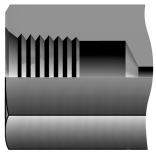

RH4 Series Relief Valves

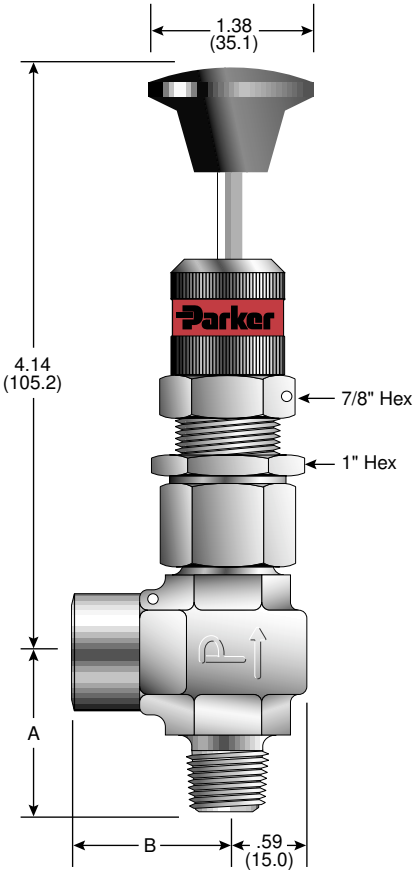

Model Shown: 4M4F-RH4A-VT-SS-MN-K2

( ) Denotes dimensions in millimeters

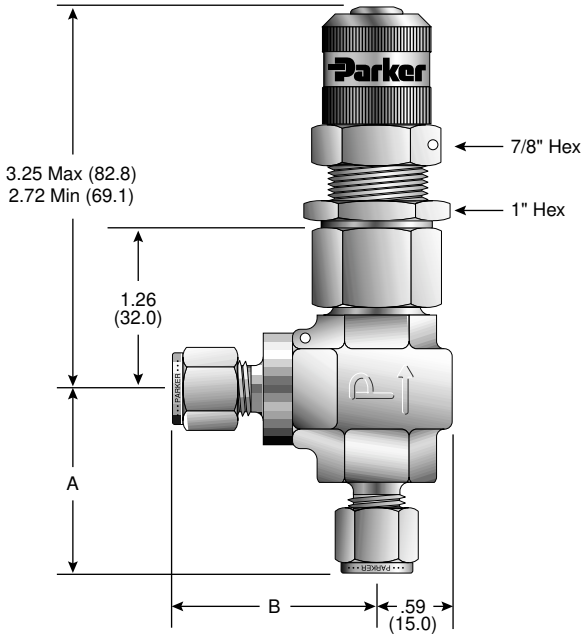

Model Shown: 4A-RH4A-BNT-SS-K1

Flow Data / Dimensions

Basic Part Number	End Connections		Flow Data				Dimensions †			
	(Inlet) Port 1	(Outlet) Port 2	Orifice		C_v	x_T ‡	A		B	
			Inch	mm			inch	mm	inch	mm
4A-RH4A	1/4" A-LOK® Compression	1/4" A-LOK® Compression					1.44	36.6	1.60	40.6
4Z-RH4A	1/4" CPI™ Compression	1/4" CPI™ Compression					1.44	36.6	1.60	40.6
4M4A-RH4A	1/4" Male NPT	1/4" A-LOK® Compression					1.19	30.2	1.60	40.6
4M4Z-RH4A	1/4" Male NPT	1/4" CPI™ Compression					1.19	30.2	1.60	40.6
4M4F-RH4A	1/4" Male NPT	1/4" Female NPT					1.19	30.2	1.17	29.7
4KF-RH4A	1/4" Female BSP/ISO Tapered	1/4" Female BSP/ISO Tapered	0.14	3.6	0.41	0.67	1.19	30.2	1.17	29.7
4KM-RH4A	1/4" Male BSP/ISO Tapered	1/4" Male BSP/ISO Tapered					1.19	30.2	1.17	29.7
M6A-RH4A	6mm A-LOK® Compression	6mm A-LOK® Compression					1.44	36.6	1.60	40.6
M6Z-RH4A	6mm CPI™ Compression	6mm CPI™ Compression					1.44	36.6	1.60	40.6
M8A-RH4A	8mm A-LOK® Compression	8mm A-LOK® Compression					1.44	36.6	1.60	40.6
M8Z-RH4A	8mm CPI™ Compression	8mm CPI™ Compression					1.44	36.6	1.60	40.6

† For CPI™ and A-LOK®, dimensions are measured with nuts in the finger tight position.
‡ Tested in accordance with ISA S75.02. Gas flow will be choked when $P_1 - P_2 / P_1 = x_T$.

Spring Kits

Kit Part Number	Cracking Pressure Range (psig)	Cracking Pressure Range (bar)	Color Code
KIT-RH4SP-50-350	50-350	3.4-24.1	Gray
KIT-RH4SP-350-750	350-750	24.1-51.7	Red
KIT-RH4SP-750-1500	750-1500	51.7-103.4	Orange
KIT-RH4SP-1500-2250	1500-2250	103.4-155.1	Yellow
KIT-RH4SP-2250-3000	2250-3000	155.1-206.8	Light Green
KIT-RH4SP-3000-4000	3000-4000	206.8-275.8	Light Blue
KIT-RH4SP-4000-5000	4000-5000	275.8-344.7	Violet
KIT-RH4SP-5000-6000	5000-6000	344.7-413.7	Lemon Yellow

Spring Kit Contains:
Spring
Coded label
PTFE washers
Locking wire / lead seal
Installation Instructions

Parker Hannifin Corporation
Instrumentation Valve Division
Jacksonville, Alabama

How To Order

The correct part number is easily derived from the following number sequence. The eight product characteristics required are coded as shown below. *Note: If the inlet and outlet ports are the same, eliminate the outlet port designator.

Example:	4Z	*	-	RH4A	-	BN	T	-	SS	-	____	-	K6
	①	②		③		④	⑤		⑥		⑦		⑧
	Inlet Port	Outlet Port		Valve Series		Seals	Back-Up Ring		Body Material		Actuation		Spring Kit

Describes a RH4A Series externally adjustable relief valve equipped with 1/4" CPI™ compression inlet and outlet ports, Buna-N seals, PTFE back-up ring, stainless steel construction, and a 3000 to 4000 psig (206.8 to 275.8 bar) spring kit.

Example:	4M	4F	-	RH4A	-	EPR	T	-	SS	-	MN	-	K1
	①	②		③		④	⑤		⑥		⑦		⑧
	Inlet Port	Outlet Port		Valve Series		Seals	Back-Up Ring		Body Material		Actuation		Spring Kit

Describes a RH4A Series externally adjustable relief valve equipped with 1/4" male NPT inlet port, 1/4" female NPT outlet port, ethylene propylene seals, PTFE back-up ring, stainless steel construction, manual override option, and a 50 to 350 psig (3.4 to 24.1 bar) spring kit.

① Inlet Port / ② Outlet Port	③ Valve Series	④ Seals	⑤ * Back-Up Rings	⑥ Body Material	⑦ Actuation	⑧ * Spring Kit
4M- Male NPT **4F** - Female NPT **4A** - A-LOK® Compression **4Z -** CPI™ Compression **4KF -** Female BSP/ISO **4KM -** Male BSP/ISO **M6A -** A-LOK® Compression **M6Z -** CPI™ Compression **M8A -** A-LOK® Compression **M8Z -** CPI™ Compression	**RH4A**	**V-** Fluorocarbon Rubber **EPR-** Ethylene Propylene Rubber **BN-** Buna-N Rubber **KZ-** Highly Fluorinated Fluorocarbon Rubber **NE** - Neoprene Rubber	**T-** PTFE	**SS-** Stainless Steel	**Blank -** Standard **MN-** Manual Override	**KI:** 50 - 350 psig **K2:** 350 - 750 psig **K3:** 750 - 1500 psig **K4:** 1500 - 2250 psig **K5:** 2250 - 3000 psig **K6:** 3000 - 4000 psig **K7:** 4000 - 5000 psig **K8:** 5000 -6000 psig

***Note:** To order valve with an elastomer back-up ring, eliminate circled number sequence 5. To order only the valve without a spring kit, eliminate circled number sequence 8.

Seal Kits

Seal Kit Order Number	Seat / Seal Material
KIT-RH4-VT	Fluorocarbon Rubber
KIT-RH4-BNT	Buna-N Rubber
KIT-RH4-EPRT	Ethylene Propylene Rubber
KIT-RH4-NET	Neoprene Rubber
KIT-RH4-KZT	Highly Fluorinated Fluorocarbon Rubber

Seal Kit Contains:
Stem Seal
PTFE Back-up Ring
Bonnet Seal
Seat
Seal Assembly Mandrel
Maintenance Instructions

WARNING

FAILURE, IMPROPER SELECTION OR IMPROPER USE OF THE PRODUCTS AND/OR SYSTEMS DESCRIBED HEREIN OR RELATED ITEMS CAN CAUSE DEATH, PERSONAL INJURY AND PROPERTY DAMAGE.

This document and other information from Parker Hannifin Corporation, its subsidiaries and authorized distributors provide product and/or system options for further investigation by users having technical expertise. It is important that you analyze all aspects of your application and review the information concerning the product or system in the current product catalog. Due to the variety of operating conditions and applications for these products or systems, the user, through its own analysis and testing, is solely responsible for making the final selection of the products and systems and assuring that all performance, safety and warning requirements of the application are met.

The products described herein, including without limitation, product features, specifications, designs, availability and pricing, are subject to change by Parker Hannifin Corporation and its subsidiaries at any time without notice.

Offer of Sale

The items described in this document are hereby offered for sale by Parker Hannifin Corporation, its subsidiaries or its authorized distributors. This offer and its acceptance are governed by the provisions stated in the "Offer of Sale" located in Catalog 4110-U Needle Valves (U Series).

© Copyright 2001, Parker Hannifin Corporation. All Rights Reserved

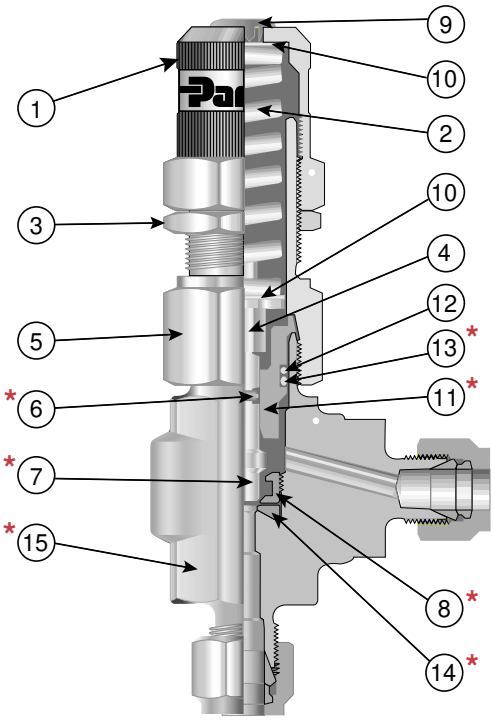

Model Shown: 4A-RH4A-BNT-SS-K1

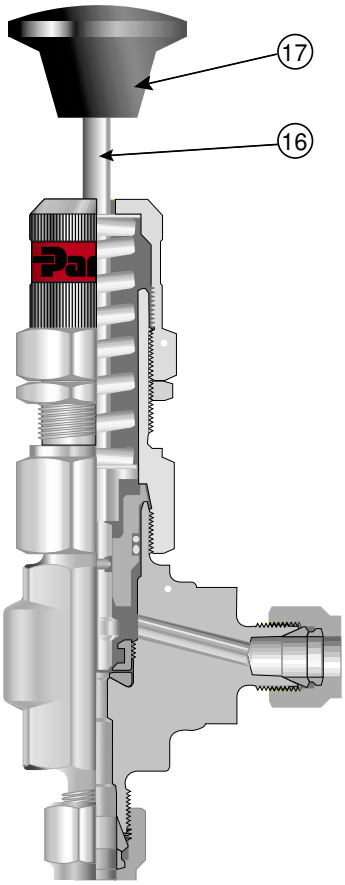

Model Shown: 4A-RH4A-VT-SS-MN-K2

Materials of Construction

Part No.	Part Description	Material
1	Cap	ASTM A 479 Type 316
2	Spring	17-7 Stainless Steel
3	Locknut	316 Stainless Steel
4	Upper Stem	ASTM A 479 Type 316
5	Bonnet	ASTM A 479 Type 316
*6	Stem Seal	*PTFE coated Fluorocarbon Rubber
*7	Lower Stem	ASTM A 479 Type 316
*8	Seat Retainer	ASTM A 479 Type 316
9	Plug	316 SS
10	Washer	PTFE
*11	Body Bonnet	ASTM A 479 Type 316
12	Back-up Ring	PTFE
*13	Bonnet Seal	*Fluorocarbon Rubber
*14	Seat	*Fluorocarbon Rubber
*15	Valve Body	ASTM A 182 Type F316
16	Handle Stem	ASTM A 479 Type 316
17	Handle	Phenolic

*Wetted Parts
*Optional seat and seal materials are located in How to Order section.
Lubrication: Perfluorinated polyether.

Crack Pressure vs. Re-seal Pressure

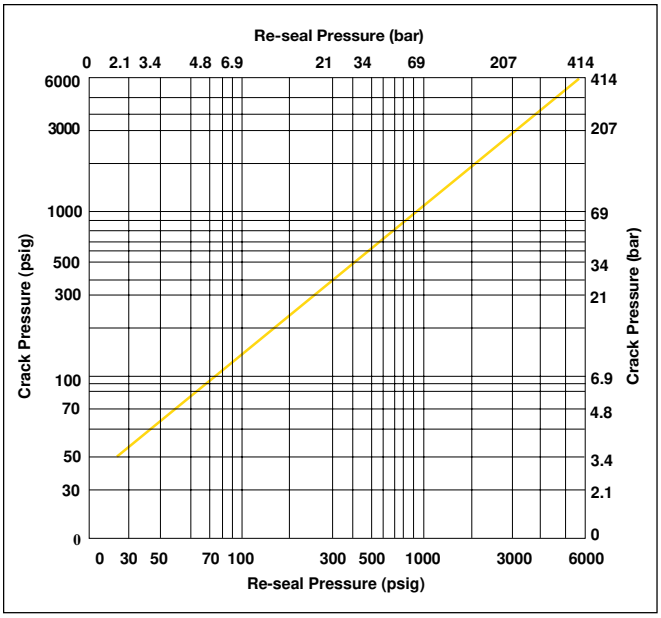

Note: Valves which are not actuated for a period of time may initially crack at higher than set crack pressures.
Note: To determine MPa, multiply bar by 0.1

Parker Hannifin Corporation
Instrumentation Valve Division
2651 Alabama Highway 21 North
Jacksonville, AL 36265-9681
USA
Phone: (256) 435-2130
Fax: (256) 435-7718
www.parker.com/IVD

Parker Hannifin plc
Instrumentation Products Division
Riverside Road
Pottington Business Park
Barnstaple, Devon EX31 1NP
England
Phone: +44 (0) 1271 313131
Fax: +44 (0) 1271 373636
Email: ipd@parker.com
www.parker.com/IPD

Accredited by the Dutch Council for Certification

Parker Instrumentation

INSTRUMENTATION VALVE DIVISION

AN ISO 9001 FACILITY

Quality Systems Registrars, Inc. QSR-202

LLOYD'S REGISTER QUALITY COMPANY ISO9001

NATIONAL ACCREDITATION OF CERTIFICATION BODIES

Parker Instrumentation

Catalog 4131-RH, 20M, 04/01