Rometec srl - www.rometec.it - Rometec srl - www.rometec.it - Rometec srl - www.rometec.it

Needle Valves

Finelok®
Instrumentation Solutions

www.finelok.com

Rometec srl - www.rometec.it - Rometec srl - www.rometec.it - Rometec srl - www.rometec.it

Rometec srl - www.rometec.it - Rometec srl - www.rometec.it - Rometec srl - www.rometec.it

Contents

General Utility Needle Valves
60N Series (414 bar) 01

Forged Needle Valves
61N Series (414 bar) 06

Union Bonnet Needle Valves
62N Series and 62HN Series (414 bar) 10

Rising Plug Valves
63N Series and 63GN Series
(414 bar) 15

High-pressure Needle Valves
100N Series (689 bar) 19

Outside Screw and Yoke Globe Pattern Needle Valves
101N Series (689 bar) 23

Integral–Bonnet Needle Valves
50N Series (345 bar) 27

Nonrotating-stem Needle Valves
30N Series (207 bar) 30

Toggle Valves
03N Series (20.7 bar) 36

General Utility Needle Valves

60N Series

Maximum working pressure:
- Stainless steel: 6000 psig (414 bar)
- Alloy C-276: 6000 psig (414 bar)
- Alloy 400: 5000 psig (345 bar)
- Titanium: 3500 psig (241 bar)
- Brass: 3000 psig (207 bar)

Working temperature:
- PTFE: -65°F to 450°F (-54°C to 232°C)
- PEEK: -65°F to 500°F (-54°C to 260°C)
- Graphite: -65°F to 1200°F (-54°C to 649°C)

Features

- ☆ Stem threads are cold rolled for high strength and smooth operation
- ☆ Stem threads above packing, protected from system media
- ☆ Linearly instead of helical movement of the nonrotating lower stem, avoiding galling damage to the seat and tip, as well as reducing the total friction area between the packing and thelower stem
- ☆ Safety back seating seal in fully open position
- ☆ Panel mounting available
- ☆ Steady and durable fastening of the handle by double lock-pins
- ☆ Handle of different colors available for option
- ☆ Leak-tight performance testing for every valve with nitrogen at the maximum working pressure

Pressure vs. Temperature

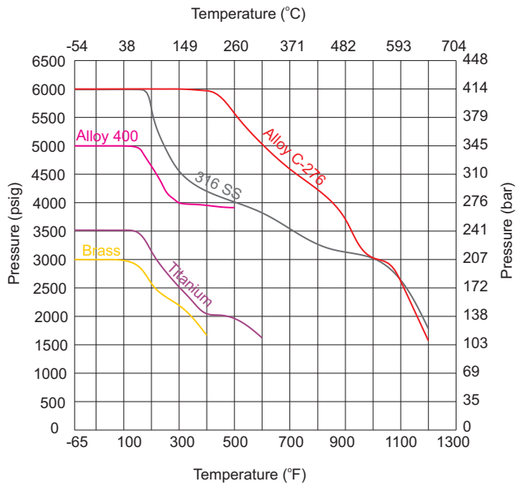

1. Graphs are based on graphite stem packing.
2. 200°F (93°C) max. with PCTFE stem tip (soft tip).
3. Contact the authorized representative or FINELOK for curve graph of other materials.

Flow Data at 100°F (38°C)

Regulating Stem

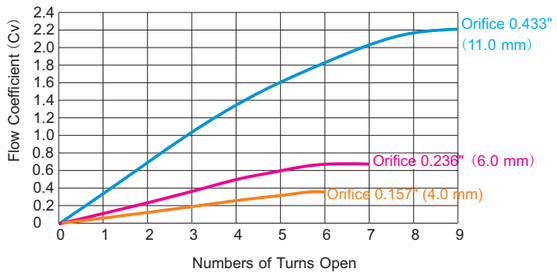

Rometec srl - www.rometec.it - Rometec srl - www.rometec.it - Rometec srl - www.rometec.it

Rometec srl - www.rometec.it - Rometec srl - www.rometec.it - Rometec srl - www.rometec.it

Standard Materials of Construction

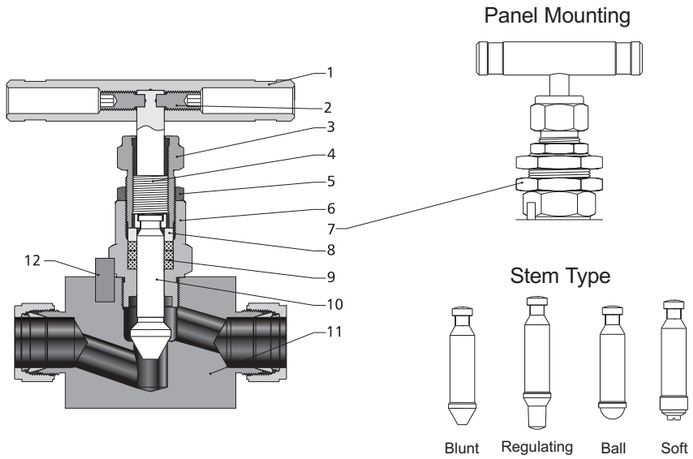

Item	Component	Valve Body Material				
		316 SS	Alloy 400	Titanium	Alloy C-276	Brass
1	Handle	Stainless steel or anodized aluminium or black knob				
2	Set Screw	Nickel cadmium-plated steel				
3	Packing Bolt	316 SS/A276				Brass 360/B16
4	Upper Stem	S17400/A564				
5	Lock Nut	316 SS/B783				Brass 360/B16
6	Bonnet	316 SS/A479	Alloy R-405/B164	Titanium Gr 4/B348	Alloy C-276/B574	Brass 360/B16
7	Panel Nut	316 SS/B783				Brass 360/B16
8	Gland	316 SS/A276				
9	Packing	PTFE or PEEK or graphite				
10	Lower Stem	Chrome-plated 316 SS/A276	Alloy R-405/B164	Titanium Gr 4/B348	Alloy C-276/B574	Chrome-plated 316 SS/A276
		Optional				
11	Body	316 SS/A479 316 SS/A182	Alloy 400/B164, B127,B564	Titanium Gr 4/B348 or titanium Gr 4/B381	Alloy C-276/B564	Brass 360/B16
	Seat	Weld stellite optional				
12	Lock Pin	304 SS/A276				
Lubricant		Molybdenum disulfide-based				

Contact the authorized representative or FINELOK for valves of other materials.

Dimensions

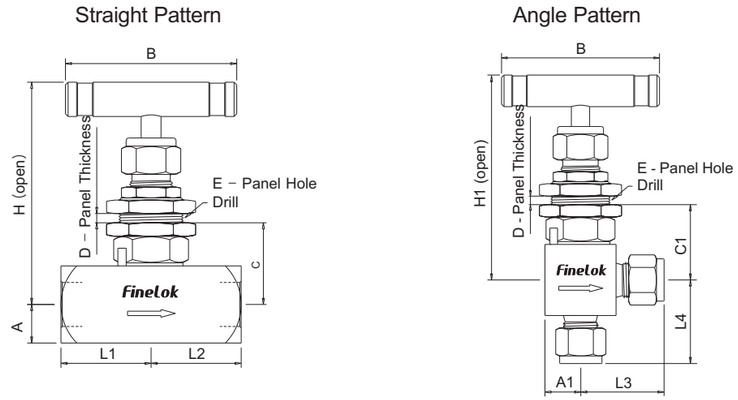

Basic Ordering Number	Connection Type and Size		Orifice in.(mm)	Cv	Dimension, in.(mm)													
	Inlet	Outlet			L1	L2	L3	L4	A	A1	B	C	C1	D	E	H	H1
-60N-FNT2-4	1/8 Female NPT	1/8 Female NPT	0.157 (4.0)	0.35	1.00 (25.4)	1.00 (25.4)	1.00 (25.4)	0.563 (14.3)	0.5 (12.7)	0.5 (12.7)	2.17 (55)	0.84 (21.4)	0.9 (23.0)	0.25 (6.4)	0.77 (19.6)	2.85 (72.4)	2.91 (74.0)
-60N-FNT4-4	1/4 Female NPT	1/4 Female NPT			1.06 (26.9)	1.06 (26.9)											
-60N-NT4-4	1/4 Male NPT	1/4 Male NPT			1.03 (26.2)	1.03 (26.2)	1.06 (26.9)	1.06 (26.9)					0.84 (21.4)				2.85 (72.4)
-60N-NT6-4	3/8 Male NPT	3/8 Male NPT			1.19 (30.2)	1.19 (30.2)											
-60N-S4-4	1/4" FINELOK	1/4" FINELOK			1.20 (30.5)	1.20 (30.5)	1.20 (30.5)	1.20 (30.5)									
-60N-SM6-4	6 mm FINELOK	6 mm FINELOK															
-60N-SM8-4	8 mm FINELOK	8 mm FINELOK															
-60N-FNT4-6	1/4 Female NPT	1/4 Female NPT	0.236 (6.0)	0.85	1.12 (28.6)	1.12 (28.6)	1.12 (28.6)	0.63 (15.9)	0.563 (14.3)	0.563 (14.3)	2.5 (63.5)	1.0 (25.4)	1.06 (27.0)	0.38 (9.7)	0.96 (24.4)	3.5 (88.9)	3.56 (90.5)
-60N-FNT6-6	3/8 Female NPT	3/8 Female NPT															
-60N-NT6-6	3/8 Male NPT	3/8 Male NPT						1.12 (28.6)					1.0 (25.4)				3.5 (88.9)
-60N-S6-6	3/8" FINELOK	3/8" FINELOK			1.41 (35.8)	1.41 (35.8)	1.32 (33.6)	1.32 (33.6)									
-60N-S8-6	1/2" FINELOK	1/2" FINELOK			1.52 (38.6)	1.52 (38.6)	1.42 (36.1)	1.42 (36.1)									
-60N-SM10-6	10 mm FINELOK	10 mm FINELOK			1.42 (36.1)	1.42 (36.1)	1.33 (33.8)	1.33 (33.8)									
-60N-SM12-6	12 mm FINELOK	12 mm FINELOK			1.52 (38.6)	1.52 (38.6)	1.42 (36.1)	1.42 (36.1)									
-60N-SM14-6	14 mm FINELOK	14 mm FINELOK			1.56 (39.7)	1.56 (39.7)											
-60N-FS6-6	3/8" FS	3/8" FS			1.13 (28.6)	1.13 (28.6)	1.13 (28.6)	1.13 (28.6)									
-60N-FS8-6	1/2" FS	1/2" FS															
-60N-MW12-6	12 mm MW	12 mm MW															
-60N-MW14-6	14 mm MW	14 mm MW															
-60N-MW16-6	16 mm MW	16 mm MW															
-60N-MB14-6	14 mm MB	14 mm MB			1.50 (38.1)	1.50 (38.1)	1.50 (38.1)	1.50 (38.1)									
-60N-MB16-6	16 mm MB	16 mm MB															
-60N-UMB14-6	14 mm UMB	14 mm UMB			2.92 (74.1)	2.92 (74.1)	—	—									
-60N-UMB16-6	16 mm UMB	16 mm UMB															
-60N-MS20-6	M20 x 1.5 Male ISO	M20 x 1.5 Male ISO			1.50 (38.1)	1.50 (38.1)											
-60N-MS22-6	M22 x 1.5 Male ISO	M22 x 1.5 Male ISO															

Rometec srl - www.rometec.it - Rometec srl - www.rometec.it - Rometec srl - www.rometec.it

Rometec srl - www.rometec.it - Rometec srl - www.rometec.it - Rometec srl - www.rometec.it

Basic Ordering Number	Connection Type and Size		Orifice in.(mm)	Cv	Dimension, in.(mm)												
	Inlet	Outlet			L1	L2	L3	L4	A	A1	B	C	C1	D	E	H	H1
-60N-FNT8-11	1/2 Female NPT	1/2 Female NPT	0.433 (11.0)	2.18	1.75 (44.5)	1.75 (44.5)	1.63 (41.3)	1.50 (38.1)	0.875 (22.2)	0.75 (19.05)	3.5 (88.9)	1.38 (34.9)	1.25 (31.75)	0.38 (9.7)	1.08 (27.5)	4.12 (104.8)	4.0 (101.6)
-60N-FNT12-11	3/4 Female NPT	3/4 Female NPT															
-60N-NT12-11	3/4 Male NPT	3/4 Male NPT					1.50 (38.1)										
-60N-S12-11	3/4" FINELOK	3/4" FINELOK			1.97 (50.0)	1.97 (50.0)	1.61 (41.0)	1.61 (41.0)									
-60N-SM14-11	14 mm FINELOK	14 mm FINELOK															
-60N-SM16-11	16 mm FINELOK	16 mm FINELOK															
-60N-SM18-11	18 mm FINELOK	18 mm FINELOK															
-60N-MW14-11	14 mm MW	14 mm MW			1.75 (44.5)	1.75 (44.5)	—	—									
-60N-MW16-11	16 mm MW	16 mm MW															
-60N-FS12-11	3/4" FS	3/4" FS															
-60N-MB14-11	14 mm MB	14 mm MB															
-60N-MB16-11	16 mm MB	16 mm MB															
-60N-UMB14-11	14 mm UMB	14 mm UMB			2.98 (75.7)	2.98 (75.7)											
-60N-MS27-11	M27 x 2 Male ISO	M27 x 2 Male ISO			1.56 (39.7)	1.56 (39.7)											
-60N-FNT12-15	3/4 Female NPT	3/4 Female NPT	0.591 (15.0)	3.27	1.75 (44.5)	1.75 (44.5)	1.75 (44.5)	1.14 (29.0)	1.14 (29.0)	0.875 (22.2)	5.0 (127)	1.7 (43.2)	1.43 (36.4)	0.38 (9.7)	1.28 (32.5)	5.0 (127)	4.72 (120)
-60N-FS16-15	1" FS	1" FS															
-60N-MW25-15	25 mm MW	25 mm MW					1.75 (44.5)	1.75 (44.5)									
-60N-MW28-15	28 mm MW	28 mm MW															
-60N-PS12-15	3/4 PS	3/4 PS															
-60N-SM20-15	20 mm FINELOK	20 mm FINELOK			2.35 (59.7)	2.35 (59.7)	2.35 (59.7)	2.0 (51.0)									
-60N-SM22-15	22 mm FINELOK	22 mm FINELOK															
-60N-FNT16-18	1 Female NPT	1 Female NPT	0.708 (18.0)	5.65	1.97 (50.0)	1.97 (50.0)	—	—	1.25 (31.75)	—	5.5 (140)	—	—	—	—	5.2 (132)	—
-60N-MW25-18	25 mm MW	25 mm MW															
-60N-FS16-18	1" FS	1" FS															
-60N-MW28-18	28 mm MW	28 mm MW															
-60N-PS12-18	3/4 PS	3/4 PS															
-60N-PS16-18	1 PS	1 PS															

1. FINELOK means FINELOK double ferrule tube fittings, FS means fractional tube socket weld, MW means metric tube socket weld, MB means metric tube butt weld, UMB means nut + gasket + metric bulge nipple, ISO means metric thread, PS means pipe socket weld.
2. Sizes and types listed are standard. Other sizes and types are available upon request, refer to the ordering information.
3. Dimensions are shown with FINELOK nuts finger-tightened. All dimensions are for reference only and are subject to change. For dimensions not shown above, please contact the authorized representative or FINELOK.

Ordering Information

SS – 60N – S8 – SM12 – W6WB – GYL – AS

- Body Material: SS 316 SS; 6L 316L SS; S4 304 SS; 4L 304L SS; S1 321 SS; 904L 904L SS; D5 Duplex 2205; TI Titanium; A20 Alloy 20; M Alloy 400; INC Alloy 600; HC Alloy C-276; 91 F91; 92 F92; B Brass; CS Carbon Steel
- Series: 60N
- Inlet Type: FNT Female NPT; NT Male NPT; FRT Female BSPT; RT Male BSPT; FMS Female Metric Thread (for RP); MS Male Metric Thread (for RG); FRP Female BSPP (for RP); BP Male BSPP (for RG); FS Fractional Tube Socket Weld; MW Metric Tube Socket Weld; FB Fractional Tube Butt Weld; MB Metric Tube Butt Weld; PS Pipe Socket Weld; PB Pipe Butt Weld; S Fractional Tube Fitting; SM Metric Tube Fitting; UFB Nut + Gasket +Fractional Bulge Nipple; UMB Nut + Gasket + Metric Bulge Nipple
- Inlet Size: 2 1/8"; 4 1/4"; 6 3/8" or 6 mm; 8 1/2" or 8 mm; 10 10 mm; 12 3/4" or 12 mm; 14 14 mm or M14 x 1.5; 16 1" or 16 mm; 18 18 mm; 20 1 1/4" or 20 mm or M20 x 1.5; 22 22 mm or M22 x 1.5; 24 M24 x 1.5; 25 25 mm; 27 M27 x 2; 28 28 mm
- Outlet Type / Outlet Size: Same as Inlet; Specify in the same way as inlet Type and inlet Size
- Seat Material: Same as Body; W Stellite; X Customer Specified
- Orifice Size: 4 0.157" (4.0 mm); 6 0.236" (6.0 mm); 11 0.433" (11 mm); 15 0.591" (15 mm); 18 0.708" (18 mm)
- Tip Material: Same as Body; W Stellite; D5 Duplex 2205; TI Titanium; A20 Alloy 20; M Alloy 400; INC Alloy 600; HC Alloy C-276
- Stem Type: Blunt; R Regulating; B Ball; T Soft Tip-PTFE; K Soft Tip-PCTFE
- Packing Material: PTFE; P PEEK; G Graphite
- Panel Mounting: No; Y Yes
- Handle: Stainless Steel Bar; C Red Aluminum Bar; F Green Aluminum Bar; J Blue Aluminum Bar; L Black Aluminum Bar; O Black Knob
- Flow Pattern: Straight; A Angle
- Special Application: NO; S NACE MR0175

Rometec srl - www.rometec.it - Rometec srl - www.rometec.it - Rometec srl - www.rometec.it

Rometec srl - www.rometec.it - Rometec srl - www.rometec.it - Rometec srl - www.rometec.it

Forged Needle Valves

61N Series

Maximum working pressure:
- Stainless steel: 6000 psig (414 bar)
- F91: 6000 psig (414 bar)
- F92: 6000 psig (414 bar)
- Brass: 3000 psig (207 bar)

Working temperature:
- PTFE: -65°F to 450°F (-54°C to 232°C)
- PEEK: -65°F to 500°F (-54°C to 260°C)
- Graphite: -65°F to 1200°F (-54°C to 649°C)

Features

- ☆ One-piece body construction
- ☆ Two-stem design: thread hardened upper stem and smooth surface hardened lower stem
- ☆ Upper stem thread lubricant isolated from system media
- ☆ Linearly instead of helical movement of the nonrotating lower stem, avoiding galling damage to the seat and tip, as well as reducing the total friction area between the packing and the lower stem
- ☆ Safety back seating seal in fully open position
- ☆ Panel mounting available as an option
- ☆ Steady and durable fastening of the handle by double lock-pins
- ☆ Handle of different colors are available for option
- ☆ Leak-tight performance testing for every valve with nitrogen at the maximum working pressure

Pressure vs. Temperature

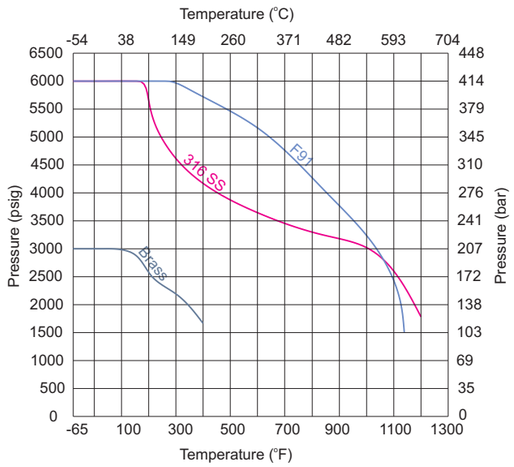

1. Graphs are based on graphite stem packing.
2. 200°F (93°C) max. with PCTFE stem tip (soft tip).
3. Contact the authorized representative or FINELOK for curve graph of other materials.

Flow Data at 100°F (38°C)

Regulating Stem

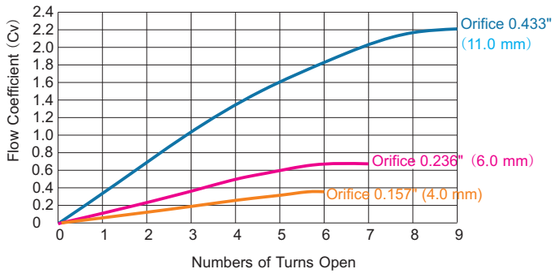

Standard Materials of Construction

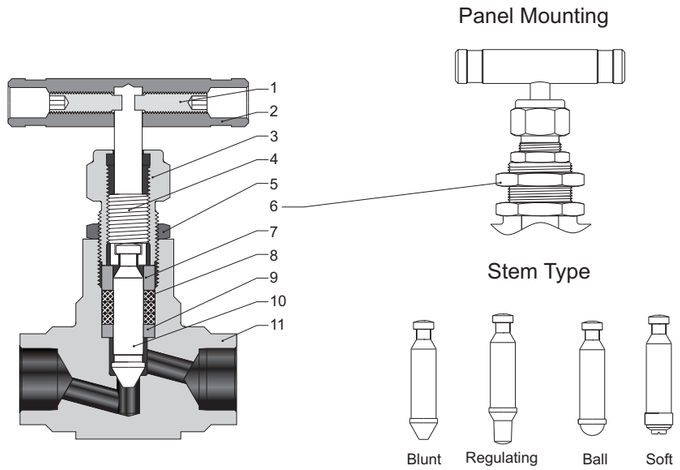

Item	Component	Valve Body Material			
		316 SS	F91	F92	Brass
1	Handle	Stainless steel or anodized aluminium or black knob			
2	Set Screw	Nickel cadmium-plated steel			
3	Packing Bolt	321 SS/A276			
4	Upper Stem	316 SS/A276	F91/A182	F92/A182	Brass 360/B16
5	Lock Nut	316 SS/B783			
6	Panel Nut	316 SS/B783			
7	Gland	316 SS/A276	F91/A182	F92/A182	Brass 360/B16
8	Packing	PTFE or PEEK or graphite			
9	Packing Washer	316 SS/A276	F91/A182	F92/A182	Brass 360/B16
10	Lower Stem	Chrome-plated 316 SS/A276	Chrome-plated F91/A182	Chrome-plated F92/A182	Chrome-plated 316 SS/A276
		Optional			
11	Body	316 SS/A182	F91/A182	F92/A182	Brass 377/B283
	Seat	Weld stellite seat optional			
Lubricant		Molybdenum disulfide-based			

Rometec srl - www.rometec.it - Rometec srl - www.rometec.it - Rometec srl - www.rometec.it

Rometec srl - www.rometec.it - Rometec srl - www.rometec.it - Rometec srl - www.rometec.it

Dimensions

Straight Pattern

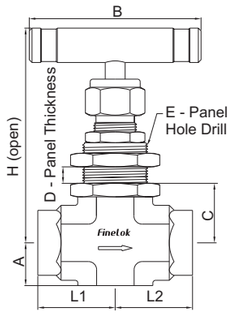

Angle Pattern

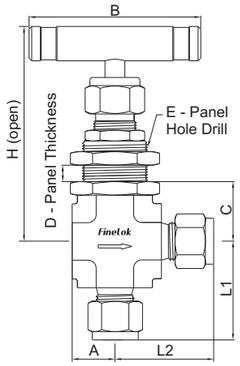

Basic Ordering Number	Connection Type and Size		Orifice in.(mm)	Cv	Dimension, in.(mm)							
	Inlet	Outlet			L1	L2	A	B	C	D	E	H
-61N-FNT2-4	1/8 Female NPT	1/8 Female NPT	0.157 (4.0)	0.35	1.00 (25.4)	1.00 (25.4)	0.53 (13.5)	2.17 (55)	0.71 (18.0)	0.25 (6.4)	0.77 (19.6)	2.85 (72.5)
-61N-FNT4-4	1/4 Female NPT	1/4 Female NPT			1.03 (26.2)	1.03 (26.2)						
-61N-S4-4	1/4" FINELOK	1/4" FINELOK			1.22 (30.9)	1.22 (30.9)						
-61N-SM6-4	6 mm FINELOK	6 mm FINELOK										
-61N-SM8-4	8 mm FINELOK	8 mm FINELOK			1.25 (31.75)	1.25 (31.75)						
-61N-NT6-4	3/8 Male NPT	3/8 Male NPT			1.19 (30.2)	1.19 (30.2)						
-61N-FNT4-6	1/4 Female NPT	1/4 Female NPT	0.236 (6.0)	0.85	1.13 (28.6)	1.13 (28.6)	0.62 (15.8)	2.50 (63.5)	0.87 (22.0)	0.38 (9.7)	0.96 (24.4)	3.38 (85.8)
-61N-FNT6-6	3/8 Female NPT	3/8 Female NPT										
-61N-NT6-6	3/8 Male NPT	3/8 Male NPT										
-61N-S6-6	3/8" FINELOK	3/8" FINELOK			1.44 (36.5)	1.44 (36.5)						
-61N-SM10-6	10 mm FINELOK	10 mm FINELOK										
-61N-SM12-6	12 mm FINELOK	12 mm FINELOK			1.53 (38.9)	1.53 (38.9)						
-61N-SM14-6	14 mm FINELOK	14 mm FINELOK			1.56 (39.7)	1.56 (39.7)						
-61N-FNT8-6	1/2 Female NPT	1/2 Female NPT			1.26 (32.0)	1.26 (32.0)						
-61N-NT8-6	1/2 Male NPT	1/2 Male NPT			1.50 (38.1)	1.50 (38.1)						
-61N-S8-6	1/2" FINELOK	1/2" FINELOK			1.53 (38.9)	1.53 (38.9)						
-61N-FS6-6	3/8" FS	3/8" FS			1.13 (28.6)	1.13 (28.6)						
-61N-FS8-6	1/2" FS	1/2" FS										
-61N-MW12-6	12 mm MW	12 mm MW										
-61N-MW14-6	14 mm MW	14 mm MW										
-61N-MW16-6	16 mm MW	16 mm MW										
-61N-MB14-6	14 mm MB	14 mm MB			1.50 (38.1)	1.50 (38.1)						
-61N-MB16-6	16 mm MB	16 mm MB										
-61N-UMB14-6	14 mm UMB	14 mm UMB			2.92 (74.1)	2.92 (74.1)						
-61N-UMB16-6	16 mm UMB	16 mm UMB										
-61N-MS20-6	M20 x 1.5 Male ISO	M20 x 1.5 Male ISO			1.50 (38.1)	1.50 (38.1)						
-61N-MS22-6	M22 x 1.5 Male ISO	M22 x 1.5 Male ISO										

Basic Ordering Number	Connection Type and Size		Orifice in.(mm)	Cv	Dimension, in.(mm)							
	Inlet	Outlet			L1	L2	A	B	C	D	E	H
-61N-FNT8-11	1/2 Female NPT	1/2 Female NPT	0.433 (11.0)	2.18	1.56 (39.7)	1.56 (39.7)	0.78 (19.8)	3.5 (88.9)	1.1 (28.3)	0.38 (9.7)	1.08 (27.5)	3.86 (98.0)
-61N-FNT12-11	3/4 Female NPT	3/4 Female NPT										
-61N-NT8-11	1/2 Male NPT	1/2 Male NPT										
-61N-NT12-11	3/4 Male NPT	3/4 Male NPT										
-61N-S12-11	3/4" FINELOK	3/4" FINELOK			1.97 (50.0)	1.97 (50.0)						
-61N-SM14-11	14 mm FINELOK	14 mm FINELOK										
-61N-SM16-11	16 mm FINELOK	16 mm FINELOK										
-61N-SM18-11	18 mm FINELOK	18 mm FINELOK										
-61N-SM20-11	20 mm FINELOK	20 mm FINELOK										
-61N-SM25-11	25 mm FINELOK	25 mm FINELOK										
-61N-MW14-11	14 mm MW	14 mm MW			1.56 (39.7)	1.56 (39.7)						
-61N-MW16-11	16 mm MW	16 mm MW										
-61N-MW18-11	18 mm MW	18 mm MW										
-61N-FS12-11	3/4" FS	3/4" FS										
-61N-PS8-11	1/2 PS	1/2 PS										
-61N-MB14-11	14 mm MB	14 mm MB										
-61N-MB16-11	16 mm MB	16 mm MB										
-61N-UMB14-11	14 mm UMB	14 mm UMB			2.98 (75.7)	2.98 (75.7)						
-61N-UMB16-11	16 mm UMB	16 mm UMB										
-61N-MS27-11	M27 x 2 Male ISO	M27 x 2 Male ISO			1.56 (39.7)	1.56 (39.7)						
-61N-FNT12-15	3/4 Female NPT	3/4 Female NPT	0.591 (15.0)	3.27	1.97 (50.0)	1.97 (50.0)	1.3 (33.0)	5.0 (127)	1.61 (41.0)	0.38 (9.7)	1.45 (36.8)	6.5 (165)
-61N-FS16-15	1" FS	1" FS										
-61N-MW25-15	25 mm MW	25 mm MW										
-61N-MW28-15	28 mm MW	28 mm MW										
-61N-PS12-15	3/4 PS	3/4 PS										
-61N-PB12-15	3/4 PB	3/4 PB										
-61N-S12-15	3/4" FINELOK	3/4" FINELOK			2.35 (59.7)	2.35 (59.7)						
-61N-S16-15	1" FINELOK	1" FINELOK										
-61N-SM20-15	20 mm FINELOK	20 mm FINELOK										
-61N-SM22-15	22 mm FINELOK	22 mm FINELOK										
-61N-SM25-15	25 mm FINELOK	25 mm FINELOK										

1. FINELOK means FINELOK double ferrule tube fittings, FS means fractional tube socket weld, MW means metric tube socket weld, MB means metric tube butt weld, UMB means nut + gasket + metric bulge nipple, ISO means metric thread, PS means pipe socket weld.
2. Sizes and types listed are standard. Other sizes and types are available upon request, refer to the ordering information.
3. Dimensions are shown with FINELOK nuts finger-tightened. All dimensions are for reference only and are subject to change. For dimensions not shown above, please contact the authorized representative or FINELOK.

Rometec srl - www.rometec.it - Rometec srl - www.rometec.it - Rometec srl - www.rometec.it

Rometec srl - www.rometec.it - Rometec srl - www.rometec.it - Rometec srl - www.rometec.it

Ordering Information

SS – 61N – FS8 – MW14 – W11WR – GYL – AS

Code	Description
Body Material	
SS	316 SS
6L	316L SS
S4	304 SS
4L	304L SS
S1	321 SS
904L	904L SS
D5	Duplex 2205
TI	Titanium
A20	Alloy 20
M	Alloy 400
INC	Alloy 600
HC	Alloy C-276
91	F91
92	F92
B	Brass
CS	Carbon Steel
Series	
61N	
Inlet Type	
FNT	Female NPT
NT	Male NPT
FRT	Female BSPT
RT	Male BSPT
FMS	Female Metric Thread (for RP)
MS	Male Metric Thread (for RG)
FRP	Female BSPP (for RP)
BP	Male BSPP (for RG)
FS	Fractional Tube Socket Weld
MW	Metric Tube Socket Weld
FB	Fractional Tube Butt Weld
MB	Metric Tube Butt Weld
PS	Pipe Socket Weld
PB	Pipe Butt Weld
S	Fractional Tube Fitting
SM	Metric Tube Fitting
UFB	Nut + Gasket + Fractional Bulge Nipple
UMB	Nut + Gasket + Metric Bulge Nipple
Inlet Size	
2	1/8"
4	1/4"
6	3/8" or 6 mm
8	1/2" or 8 mm
10	10 mm
12	3/4" or 12 mm
14	14 mm or M14 x 1.5
16	1" or 16 mm
18	18 mm
20	1 1/4" or 20 mm or M20 x 1.5
22	22 mm or M22 x 1.5
24	M24 x 1.5
25	25 mm
27	M27 x 2
28	28 mm
Outlet Type	
Outlet Size	
	Same as Inlet
	Specify in the same way as inlet type and inlet size
Seat Material	
	Same as Body
W	Stellite
X	Customer Specified
Orifice Size	
4	0.157" (4.0 mm)
6	0.236" (6.0 mm)
11	0.433" (11 mm)
15	0.591" (15 mm)
Tip Material	
	Same as Body
W	Stellite
D5	Duplex 2205
TI	Titanium
A20	Alloy 20
M	Alloy 400
INC	Alloy 600
HC	Alloy C-276
Stem Type	
	Blunt
R	Regulating
B	Ball
T	Soft Tip-PTFE
K	Soft Tip-PCTFE
Packing Material	
	PTFE
P	PEEK
G	Graphite
Panel Mounting	
	No
Y	Yes
Handle	
	Stainless Steel Bar
C	Red Aluminum Bar
F	Green Aluminum Bar
J	Blue Aluminum Bar
L	Black Aluminum Bar
O	Black Knob
Flow Pattern	
	Straight
A	Angle
Special Application	
	NO
S	NACE MR0175

Union Bonnet Needle Valves

62N Series and 62HN Series

Maximum working pressure:
62N series
Stainless steel: 6000 psig (414 bar)
Alloy C-276: 6000 psig (414 bar)
Alloy 400: 5000 psig (345 bar)
Titanium: 3500 psig (241 bar)
62HN series: 10000 psig (689 bar)

Working temperature:
PTFE: -65 F to 450 F (-54 C to 232 C)
PEEK: -65 F to 500 F (-54 C to 260 C)
Graphite: -65 F to 1200 F (-54 C to 649 C)

Features

- ☆ Two-stem design: thread hardened upper stem and smooth surface hardened lower stem.
- ☆ Accidental valve disassembly disabled by union bonnet construction
- ☆ Upper stem thread lubricant isolated from system media
- ☆ Linearly instead of helical movement of the nonrotating lower stem, avoiding galling damage to the seat and tip, as well as reducing the total friction area between the packing and the lower stem
- ☆ Safety back seating seal in fully open position
- ☆ Panel mounting available as an option
- ☆ Steady and durable fastening of the handle by double lock-pins
- ☆ Handle of different colors available for option
- ☆ Leak-tight performance testing for every valve with nitrogen at the maximum working pressure, but not higher than 6000 psig

Pressure vs. Temperature

62N Series

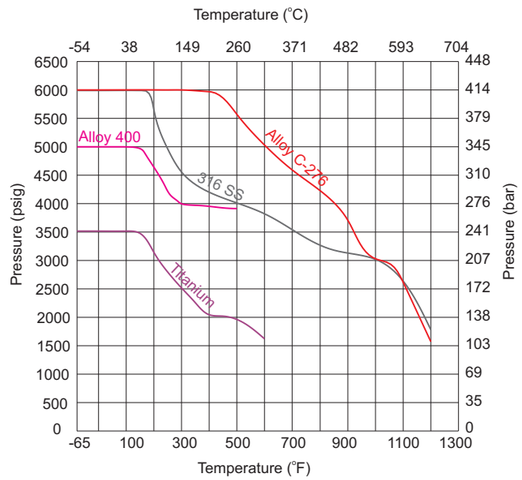

62NH Series

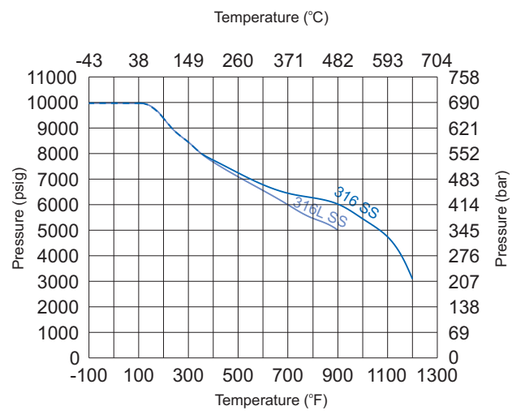

1. Graphs are based on graphite stem packing.
2. 200°F (93°C) max. with PCTFE stem tip (soft tip).
3. Contact the authorized representative or FINELOK for curve graph of other materials.

Rometec srl - www.rometec.it - Rometec srl - www.rometec.it - Rometec srl - www.rometec.it

Rometec srl - www.rometec.it - Rometec srl - www.rometec.it - Rometec srl - www.rometec.it

Flow Data at 100°F (38°C)

Regulating Stem

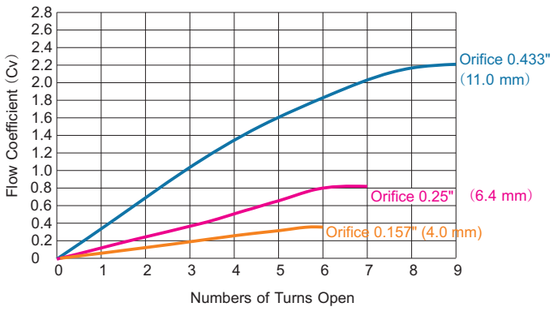

Standard Materials of Construction

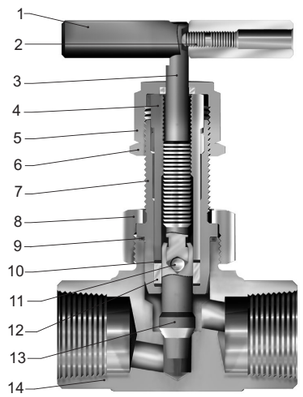

Stem Type

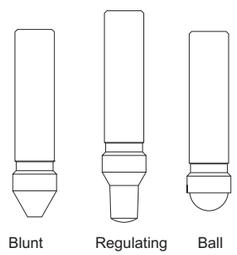

Item	Component	Valve Body Material			
		316 SS	Alloy 400	Titanium	Alloy C-276
1	Handle	Stainless stee or anodized aluminium or black knob			
2	Set Screw	Nickel cadmium-plated steel			
3	Upper Stem	316 SS/A276			
4	Stem Guide	416 SS/A581			
5	Lock Nut	316 SS/A276			
6	Panel Nut	316 SS/B783			
7	Bonnet	316 SS/A479	Alloy R-405/B164	Titanium Gr 4/B348	Alloy C-276/B574
8	Union Nut	316 SS/A276			
9	Bonnet Seal	316 SS/A479	Alloy R-405/B164	Titanium Gr 4/B348	Alloy C-276/B574
10	Packing Washer	316 SS/A479	Alloy R-405/B164	Titanium Gr 4/B348	Alloy C-276/B574
11	Ball	440C			
12	Packing	PTFE or PEEK or graphite			
13	Lower Stem	Chrome-plated 316 SS/A276	Alloy R-405/B164	Titanium Gr 4/B348	Alloy C-276/B574
		Optional			
14	Body	316 SS/A182	Alloy 400/B164, B127, B564	Titanium Gr 4/B348 or titanium Gr 4/B381	Alloy C-276/B564
	Seat	Weld stellite optional			
Lubricant		Molybdenum disulfide-based			

Dimensions of 62N Series

Straight Pattern

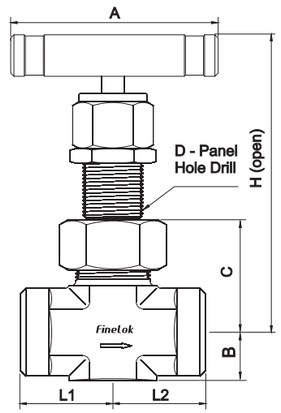

Angle Pattern

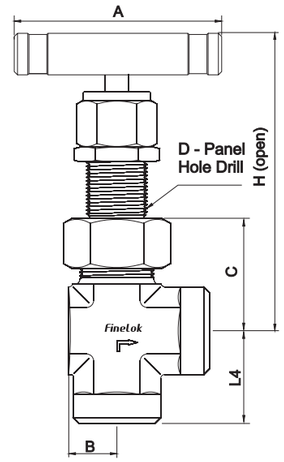

Basic Ordering Number	Connection Type and Size		Orifice in.(mm)	Cv	Dimension, in.(mm)								
	Inlet	Outlet			L1	L2	L3	L4	A	B	C	D	H
-62N-FNT2-4	1/8 Female NPT	1/8 Female NPT	0.157 (4.0)	0.35	1.00 (25.4)	1.00 (25.4)	0.89 (22.6)	1.00 (25.4)	1.75 (44.5)	0.39 (9.9)	1.09 (27.7)	19/32 (15.1)	3.04 (77.2)
-62N-FNT4-4	1/4 Female NPT	1/4 Female NPT			1.03 (26.2)	1.03 (26.2)							
-62N-NT4-FNT4-4	1/4 Male NPT	1/4 Female NPT			1.00 (25.4)	1.03 (26.2)							
-62N-NT4-4	1/4 Male NPT	1/4 Male NPT			1.00 (25.4)	1.00 (25.4)	1.00 (25.4)						
-62N-NT6-4	3/8 Male NPT	3/8 Male NPT											
-62N-FRP4-4	1/4 Female BSPP	1/4 Female BSPP			1.03 (26.2)	1.03 (26.2)	0.89 (22.6)						
-62N-NT4-S4-4	1/4 Male NPT	1/4" FINELOK			1.00 (25.4)	1.22 (30.9)	1.16 (29.5)						
-62N-FNT4-S4-4	1/4 Female NPT	1/4" FINELOK			1.03 (26.2)	1.22 (30.9)							
-62N-S4-4	1/4" FINELOK	1/4" FINELOK			1.22 (30.9)	1.22 (30.9)		1.48 (37.6)					
-62N-SM6-4	6 mm FINELOK	6 mm FINELOK											
-62N-SM8-4	8 mm FINELOK	8 mm FINELOK											
-62N-FS4-4	1/4" FS	1/4" FS			0.91 (23.1)	0.91 (23.1)	0.88 (22.4)	1.19 (30.2)					
-62N-FO4-4	1/4" Male FO	1/4" Male FO			1.03 (26.2)	1.03 (26.2)							
-62N-FR4-4	1/4" Male FR	1/4" Male FR											
-62N-FNT4-6	1/4 Female NPT	1/4 Female NPT	0.25 (6.4)	0.8	1.13 (28.6)	1.13 (28.6)	1.0 (25.4)	1.13 (28.6)	2.50 (63.5)	0.50 (12.7)	1.34 (34.0)	25/32 (19.8)	3.70 (94)
-62N-FNT6-6	3/8 Female NPT	3/8 Female NPT											
-62N-NT6-6	3/8 Male NPT	3/8 Male NPT					1.06 (26.9)						
-62N-NT8-6	1/2 Male NPT	1/2 Male NPT			1.50 (38.1)	1.50 (38.1)	1.25 (31.8)	1.50 (38.1)					
-62N-S6-6	3/8" FINELOK	3/8" FINELOK			1.41 (35.9)	1.41 (35.9)	1.29 (32.8)	1.66 (42.2)					
-62N-S8-6	1/2" FINELOK	1/2" FINELOK			1.52 (38.6)	1.52 (38.6)	1.40 (35.6)	1.65 (41.9)					
-62N-SM10-6	10 mm FINELOK	10 mm FINELOK			1.42 (36.1)	1.42 (36.1)	1.30 (33.0)	1.55 (39.4)					

1. FINELOK means FINELOK double ferrule tube fittings, FS means fractional tube socket weld, MW means metric tube socket weld, MB means metric tube butt weld, UMB means nut + gasket + metric bulge nipple, ISO means metric thread, PS means pipe socket weld.
2. Sizes and types listed are standard. Other sizes and types are available upon request, refer to the ordering information.
3. Dimensions are shown with FINELOK nuts finger-tightened. All dimensions are for reference only and are subject to change. For dimensions not shown above, please contact the authorized representative or FINELOK.

Rometec srl - www.rometec.it - Rometec srl - www.rometec.it - Rometec srl - www.rometec.it

Rometec srl - www.rometec.it - Rometec srl - www.rometec.it - Rometec srl - www.rometec.it

Basic Ordering Number	Connection Type and Size		Orifice in.(mm)	Cv	Dimension, in.(mm)								
	Inlet	Outlet			L1	L2	L3	L4	A	B	C	D	H
-62N-SM12-6	12 mm FINELOK	12 mm FINELOK	0.25 (6.4)	0.8	1.52 (38.6)	1.52 (38.6)	1.40 (35.6)	1.65 (41.9)	2.50 (63.5)	0.50 (12.7)	1.34 (34.0)	25/32 (19.8)	3.70 (94)
-62N-SM14-6	14 mm FINELOK	14 mm FINELOK											
-62N-SM16-6	16 mm FINELOK	16 mm FINELOK											
-62N-FS6-6	3/8" FS	3/8" FS			1.13 (28.6)	1.13 (28.6)	1.00 (25.4)	1.13 (28.6)					
-62N-FS8-6	1/2" FS	1/2" FS											
-62N-PS4-6	1/4 PS	1/4 PS											
-62N-MW12-6	12 mm MW	12 mm MW											
-62N-MW14-6	14 mm MW	14 mm MW											
-62N-MW16-6	16 mm MW	16 mm MW											
-62N-MB14-6	14 mm MB	14 mm MB			1.50 (38.1)	1.50 (38.1)	1.25 (31.8)	1.50 (38.1)					
-62N-MB16-6	16 mm MB	16 mm MB											
-62N-UMB14-6	14 mm UMB	14 mm UMB			2.92 (74.1)	2.92 (74.1)	2.55 (64.7)	2.92 (74.1)					
-62N-MS20-6	M20 x 1.5 Male ISO	M20 x 1.5 Male ISO			1.50 (38.1)	1.50 (38.1)	1.13 (28.6)	1.50 (38.1)					
-62N-MS22-6	M22 x 1.5 Male ISO	M22 x 1.5 Male ISO											
-62N-FNT8-11	1/2 Female NPT	1/2 Female NPT	0.433 (11.0)	2.2	1.56 (39.6)	1.56 (39.6)	1.31 (33.3)	1.56 (39.6)	3.50 (88.9)	0.78 (19.8)	1.91 (48.5)	1 1/32 (26.2)	4.85 (123)
-62N-FNT12-11	3/4 Female NPT	3/4 Female NPT			1.63 (41.3)	1.63 (41.3)	——	——					
-62N-FNT16-11	1 Female NPT	1 Female NPT			1.81 (46.0)	1.81 (46.0)							
-62N-NT12-11	3/4 Male NPT	3/4 Male NPT			1.63 (41.3)	1.63 (41.3)							
-62N-S8-11	1/2" FINELOK	1/2" FINELOK			1.97 (50.0)	1.97 (50.0)	1.68 (42.7)	2.08 (52.8)					
-62N-S12-11	3/4" FINELOK	3/4" FINELOK											
-62N-SM14-11	14 mm FINELOK	14 mm FINELOK											
-62N-SM16-11	16 mm FINELOK	16 mm FINELOK											
-62N-SM18-11	18 mm FINELOK	18 mm FINELOK											
-62N-SM20-11	20 mm FINELOK	20 mm FINELOK											
-62N-MW14-11	14 mm MW	14 mm MW			1.56 (39.7)	1.56 (39.7)	1.31 (33.3)	1.69 (42.9)					
-62N-MW16-11	16 mm MW	16 mm MW											
-62N-FS8-11	1/2" FS	1/2" FS											
-62N-FS12-11	3/4" FS	3/4" FS											
-62N-MB14-11	14 mm MB	14 mm MB											
-62N-MB16-11	16 mm MB	16 mm MB											
-62N-UMB14-11	14 mm UMB	14 mm UMB			2.98 (75.7)	2.98 (75.7)							

1. FINELOK means FINELOK double ferrule tube fittings, FS means fractional tube socket weld, MW means metric tube socket weld, MB means metric tube butt weld, UMB means nut + gasket + metric bulge nipple, ISO means metric thread, PS means pipe socket weld.
2. Sizes and types listed are standard. Other sizes and types are available upon request, refer to the ordering information.
3. Dimensions are shown with FINELOK nuts finger-tightened. All dimensions are for reference only and are subject to change. For dimensions not shown above, please contact the authorized representative or FINELOK.

Dimensions of 62HN Series

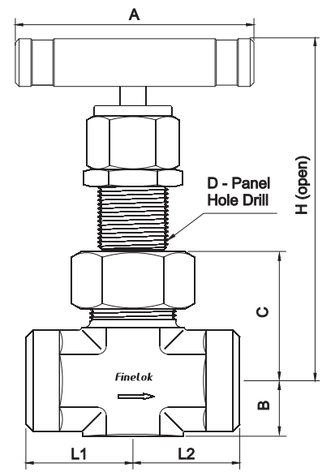

Basic Ordering Number	Connection Type and Size		Orifice in.(mm)	Cv	Dimension, in.(mm)						
	Inlet	Outlet			L1	L2	A	B	C	D	H
-62HN-FNT2-4	1/8 Female NPT	1/8 Female NPT	0.157 (4.0)	0.35	1.125 (28.58)	1.125 (28.58)	2.5 (63.5)	0.5 (12.7)	1.34 (34.1)	25/32 (19.8)	3.31 (84.1)
-62HN-FNT4-4	1/4 Female NPT	1/4 Female NPT									
-62HN-NT4-FNT4-4	1/4 Male NPT	1/4 Female NPT									
-62HN-NT4-4	1/4 Male NPT	1/4 Male NPT									
-62HN-NT6-4	3/8 Male NPT	3/8 Male NPT									
-62HN-NT4-S4-4	1/4 Male NPT	1/4" FINELOK			1.125 (28.58)	1.41 (35.7)					
-62HN-FNT4-S4-4	1/4 Female NPT	1/4" FINELOK									
-62HN-S4-4	1/4" FINELOK	1/4" FINELOK			1.41 (35.7)	1.41 (35.7)					
-62HN-SM6-4	6 mm FINELOK	6 mm FINELOK									
-62HN-SM8-4	8 mm FINELOK	8 mm FINELOK									
-62HN-FS4-4	1/4" FS	1/4" FS			1.125 (28.58)	1.125 (28.58)					
-62HN-FNT4-6	1/4 Female NPT	1/4 Female NPT	0.25 (6.4)	0.86	1.56 (39.6)	1.56 (39.6)	3.50 (88.9)	0.63 (16.0)	1.81 (46.0)	1 1/32 (26.2)	4.13 (105)
-62HN-NT8-6	1/2 Male NPT	1/2 Male NPT									
-62HN-FNT8-6	1/2 Female NPT	1/2 Female NPT			1.63 (41.4)	1.63 (41.4)		0.78 (19.8)	1.94 (49.3)		4.13 (105)
-62HN-NT8-FNT8-6	1/2 Male NPT	1/2 Female NPT									
-62HN-S8-6	1/2" FINELOK	1/2" FINELOK			1.97 (50.0)	1.97 (50.0)		0.63 (16.0)	1.81 (46.0)		4.25 (108)
-62HN-SM12-6	12 mm FINELOK	12 mm FINELOK									
-62HN-FS8-6	1/2" FS	1/2" FS			1.56 (39.7)	1.56 (39.7)					
-62HN-MW12-6	12 mm MW	12 mm MW									

1. FINELOK means FINELOK double ferrule tube fittings, FS means fractional tube socket weld, MW means metric tube socket weld, MB means metric tube butt weld, UMB means nut + gasket + metric bulge nipple, ISO means metric thread, PS means pipe socket weld.
2. Sizes and types listed are standard. Other sizes and types are available upon request, refer to the ordering information.
3. Dimensions are shown with FINELOK nuts finger-tightened. All dimensions are for reference only and are subject to change. For dimensions not shown above, please contact the authorized representative or FINELOK.

Rometec srl - www.rometec.it - Rometec srl - www.rometec.it - Rometec srl - www.rometec.it

Rometec srl - www.rometec.it - Rometec srl - www.rometec.it - Rometec srl - www.rometec.it

Ordering Information

SS – 62N – FNT6 – S6 – W6WB – GL – AS

Body Material	Series	Inlet Type	Inlet Size	Outlet Type / Outlet Size	Seat Material	Orifice Size	Lower Stem Material	Stem Type	Packing Material	Handle	Flow Pattern	Special Application
SS 316 SS	62N	FNT Female NPT	2 1/8"	Outlet Type: Same as Inlet; Outlet Size: Specify in the same way as inlet type and inlet size	W Stellite	4 0.157" (4.0 mm)	W Stellite	R Regulating	P PEEK	C Red Aluminum Bar	A Angle	NO
6L 316L SS	62HN	NT Male NPT	4 1/4"		X Customer Specified	6 0.25" (6.4 mm)	D5 Duplex 2205	B Ball	G Graphite	F Green Aluminum Bar		S NACE MR0175
S4 304 SS		FRT Female BSPT	6 3/8" or 6 mm			11 0.433" (11 mm)	TI Titanium	T Soft Tip-PTFE		J Blue Aluminum Bar	Straight	
4L 304L SS		RT Male BSPT	8 1/2" or 8 mm				A20 Alloy 20	K Soft Tip-PCTFE		L Black Aluminum Bar		
S1 321 SS		FMS Female Metric Thread (for RP)	10 10 mm				M Alloy 400	P Soft Tip-PEEK		O Black Knob		
904L 904L SS		MS Male Metric Thread (for RG)	12 3/4" or 12 mm				INC Alloy 600					
D5 Duplex 2205		FRP Female BSPP (for RP)	14 14 mm or M14 x 1.5				HC Alloy C-276					
TI Titanium		BP Male BSPP (for RG)	16 1" or 16 mm									
A20 Alloy 20		FS Fractional Tube Socket Weld	18 18 mm									
M Alloy 400		MW Metric Tube Socket Weld	20 1 1/4" or 20 mm or M20 x 1.5									
INC Alloy 600		FB Fractional Tube Butt Weld	22 22 mm or M22 x 1.5									
HC Alloy C -276		MB Metric Tube Butt Weld	24 M24 x 1.5									
91 F91		PS Pipe Socket Weld	25 25 mm									
92 F92		PB Pipe Butt Weld	27 M27 x 2									
B Brass		S Fractional Tube Fitting	28 28 mm									
CS Carbon Steel		SM Metric Tube Fitting										
		UFB Nut + Gasket + Fractional Bulge Nipple										
		UMB Nut + Gasket + Metric Bulge Nipple										

Rising Plug Valves

63N Series and 63GN Series

Maximum working pressure:
- Stainless steel: 6000 psig (414 bar)
- Alloy 400: 5000 psig (345 bar)

Working temperature:
- Acetal: -20°F to 250°F (-28°C to 121°C)
- PEEK: -20°F to 400°F (-28°C to 204°C)
- PFA: -20°F to 400°F (-28°C to 204°C)

Features

- ☆ Nonrotating stem for longer seat life
- ☆ Roddable, straight through flow path for maximum flow with minimum pressure drop
- ☆ Stem thread lubricant isolated from system media
- ☆ Replaceable seat and stem tip design
- ☆ Stem thread protected from outside contamination by PTFE ring in the gland
- ☆ Panel mounting available as an option
- ☆ Steady and durable fastening of the handle by double lock-pins
- ☆ Handle of different colors available for option
- ☆ Leak-tight performance testing for every valve with nitrogen at the maximum working pressure

Pressure vs. Temperature

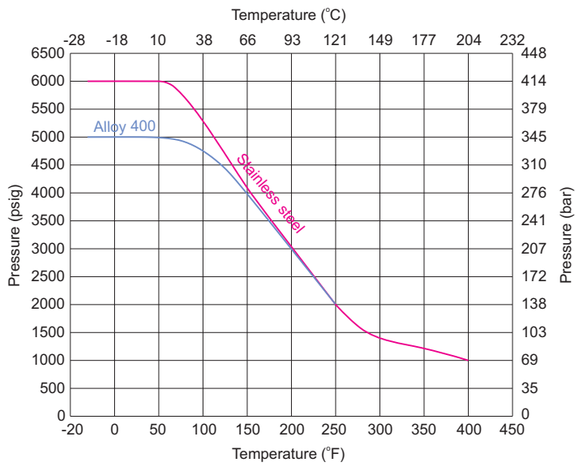

1. Graphs are based on PEEK seat.
2. Contact the authorized representative or FINELOK for curve graph of other materials.

Flow Data at 100°F (38°C)

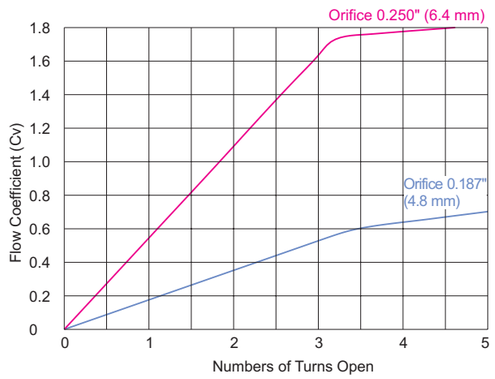

Rometec srl - www.rometec.it - Rometec srl - www.rometec.it - Rometec srl - www.rometec.it

Rometec srl - www.rometec.it - Rometec srl - www.rometec.it - Rometec srl - www.rometec.it

Standard Materials of Construction

Panel Mounting

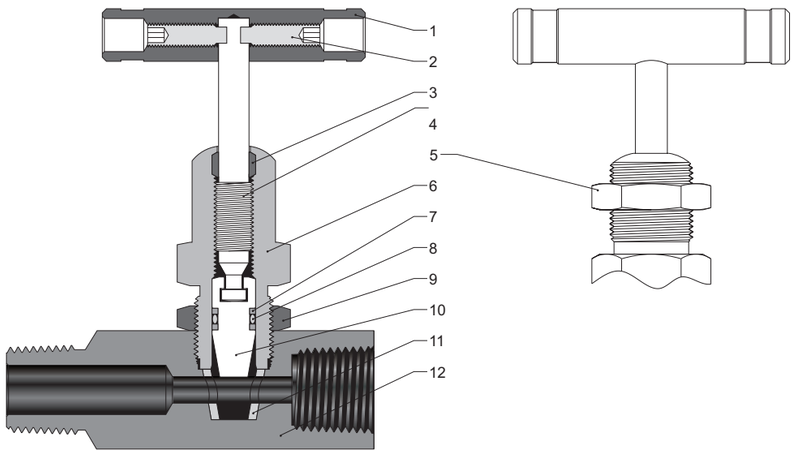

Item	Component	Valve Body Material			
		316 SS	304 SS	321 SS	Alloy R-405
1	Handle	Stainless steel or anodized aluminum or black knob			
2	Set Screw	Nickel cadmium-plated steel			
3	Wiper Ring	PTFE/D1710			
4	Upper Stem	316 SS/A276	304 SS/A276	321 SS/A276	Alloy R-405/B164
5	Panel Nut	316 SS/B783			
6	Bonnet	316 SS/A479	304 SS/A479	321 SS/A479	Alloy R-405/B164
7	Backup Ring	PTFE/D1710			
8	O-ring	Fluorocarbon FKM			
9	Lock Nut	316 SS/B783			
10	Stem Tip	316 SS/A276	304 SS/A276	321 SS/A276	Alloy R-405/B164
11	Seat	Acetal or PEEK or PFA			
12	Body	316 SS/A479	304 SS/A479	321 SS/A479	Alloy R-405/B164
Lubricant		Molybdenum disulfide-based and fluorocarbon-based			

Sour Gas Application

NR series valves are available for sour gas application. Materials for wetted components are in accordance with NACE specification MR0175 for sulfide stress cracking-resistant materials.

Materials

Body, bonnet: annealed 316 SS
O-ring: ethylene propylene
Stem tip: alloy R-405/ASTM B164
All other components are the same as standard product.

Dimensions

Standard Pattern
63N Series

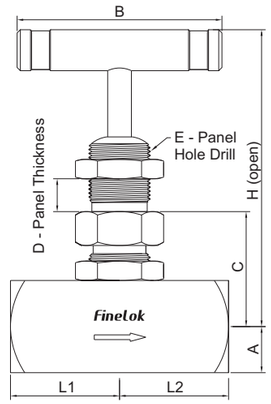

Gauge Port Pattern
63GN Series

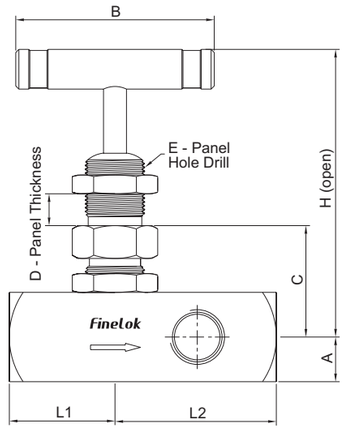

Basic Ordering Number	Connection Type and Size		Orifice in.(mm)	Cv	Dimension, in.(mm)							
	Inlet	Outlet			L1	L2	A	B	C	D	E	H
-63N-FNT4-4	1/4 Female NPT	1/4 Female NPT	0.187 (4.8)	0.63	1.12 (28.4)	1.12 (28.4)	0.44 (11.1)	2.17 (55)	1.08 (27.5)	0.25 (6.4)	0.65 (16.1)	3.77 (95.8)
-63N-NT4-FNT4-4	1/4 Male NPT	1/4 Female NPT			1.78 (45.2)							
-63N-NT8-FNT4-4	1/2 Male NPT	1/4 Female NPT			1.89 (48.0)							
-63GN-FNT4-4	1/4 Female NPT	1/4 Female NPT			1.12 (28.4)	1.75 (44.4)	0.50 (12.7)					
-63GN-NT8-FNT4-4	1/2 Male NPT	1/4 Female NPT										
-63N-FNT8-6	1/2 Female NPT	1/2 Female NPT	0.25 (6.4)	1.80	1.33 (33.8)	1.33 (33.8)	0.56 (14.3)	2.5 (63.5)	1.4 (35.5)	0.38 (9.7)	0.77 (19.6)	3.83 (97.3)
-63N-NT8-FNT8-6	1/2 Male NPT	1/2 Female NPT			2.16 (54.9)							
-63N-63N-NT12-FNT8-6	3/4 Male NPT	1/2 Female NPT										
-63GN-FNT8-6	1/2 Female NPT	1/2 Female NPT			3.33 (84.6)	2.25 (57.2)						
-63GN-NT12-FNT8-6	3/4 Male NPT	1/2 Female NPT										

1. Sizes and types listed are standard. Other sizes and types are available upon request.
2. For dimensions not shown above, please contact the authorized representative or FINELOK.

Rometec srl - www.rometec.it - Rometec srl - www.rometec.it - Rometec srl - www.rometec.it

Rometec srl - www.rometec.it - Rometec srl - www.rometec.it - Rometec srl - www.rometec.it

Ordering Information

SS – 63N – NT8 – FNT8 – P6 – BYL – S

Code	Body Material	Series	Inlet Type	Inlet Size	Outlet Type / Outlet Size	Seat Material	Orifice Size	O-ring Material	Panel Mounting	Handle	NACE MR0175
SS	316 SS	63N	FNT Female NPT	2 1/8"	Same as Inlet	A PFA	4 0.187" (4.8 mm)	E Ethylene propylene	Y Yes	O Black Knob	S Yes
6L	316L SS	63GN	NT Male NPT	4 1/4"	Specify in the same way as inlet type and inlet size	P PEEK	6 0.250" (6.4 mm)	B Buna N	No	M Black Aluminum Bar	No
S4	304 SS		FRT Female BSPT	6 3/8" or 6 mm		C Acetal		FKM		J Blue Aluminum Bar	
4L	304L SS		RT Male BSPT	8 1/2" or 8 mm						F Green Aluminum Bar	
S1	321 SS		FMS Female Metric Thread (for RP)	10 10 mm						C Red Aluminum Bar	
D5	Duplex 2205		MS Male Metric Thread (for RG)	12 3/4" or 12 mm						Stainless Steel Bar	
TI	Titanium		FRP Female BSPP (for RP)	14 14 mm or M14 x 1.5							
A20	Alloy 20		BP Male BSPP (for RG)	16 1" or 16 mm							
M	Alloy 400			18 18 mm							
INC	Alloy 600			20 1 1/4" or 20 mm or M20 x 1.5							
HC	Alloy C -276			22 22 mm or M22 x 1.5							
B	Brass			24 M24 x 1.5							
CS	Carbon Steel			25 25 mm							
904L	904L SS										

High-pressure Needle Valves

100N Series

Maximum working pressure: 10000 psig (689 bar)
Working temperature:
PTFE: -65°F to 450°F (-54°C to 232°C)
PEEK: -65°F to 500°F (-54°C to 260°C)
Graphite: -65°F to 1200°F (-54°C to 649°C)

Features

- ☆ One-piece body construction
- ☆ Two-stem design: thread hardened upper stem and smooth surface hardened lower stem
- ☆ Upper stem thread lubricant isolated from system media
- ☆ Linearly instead of helical movement of the nonrotating lower stem, avoiding galling damage to the seat and tip, as well as reducing the total friction area between the packing and the lower stem
- ☆ Safety back seating seal in fully open position
- ☆ Panel mounting available as an option
- ☆ Steady and durable fastening of the handle by double lock-pins
- ☆ Handle of different colors available for option
- ☆ Leak-tight performance testing for every valve with nitrogen at 6000 psig

Pressure vs. Temperature

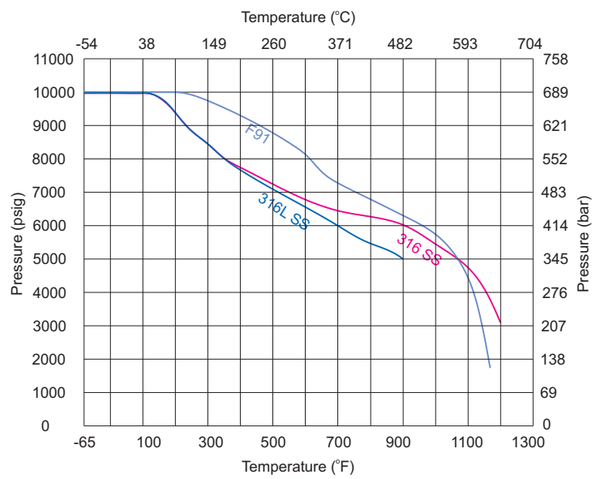

1. Graphs are based on graphite stem packing.
2. Contact the authorized representative or FINELOK for curve graph of other materials.

Flow Data at 100°F (38°C)

Regulating Stem

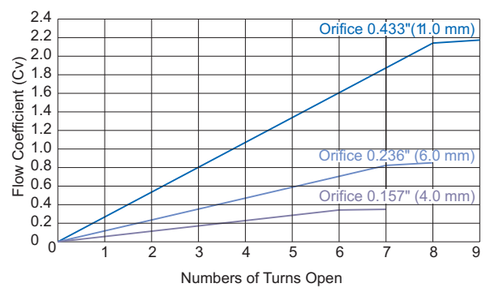

Rometec srl - www.rometec.it - Rometec srl - www.rometec.it - Rometec srl - www.rometec.it

Rometec srl - www.rometec.it - Rometec srl - www.rometec.it - Rometec srl - www.rometec.it

Standard Materials of Construction

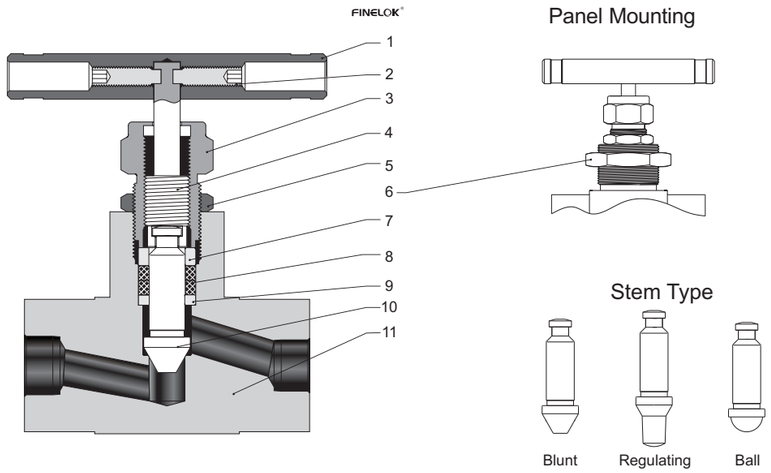

Item	Component	Valve Body Material			
		316L SS	316 SS	F91	F92
1	Handle	Anodized aluminum or stainless steel or black knob			
2	Set Screw	Nickel cadmium-plated steel			
3	Packing Bolt	321 SS/A276			
4	Upper Stem	321 SS/A276			
5	Lock Nut	316 SS/B783			
6	Panel Nut	316 SS/B783			
7	Gland	316 SS/A276	316 SS/A276	F91/A182	F92/A182
8	Packing	PTFE or PEEK or graphite			
9	Packing Washer	316 SS/A276	316 SS/A276	F91/A182	F92/A182
10	Lower Stem	Chrome-plated 316 SS/A276	Chrome-plated 316 SS/A276	Chrome-plated F91/A182	Chrome-plated F92/A182
		Optional			
11	Body	316L SS/A479 316L SS/A182	316 SS/A479 316 SS/A182	F91/A182	F92/A182
	Seat	Weld stellite seat optional			
Lubricant		Molybdenum disulfide-based			

Dimensions

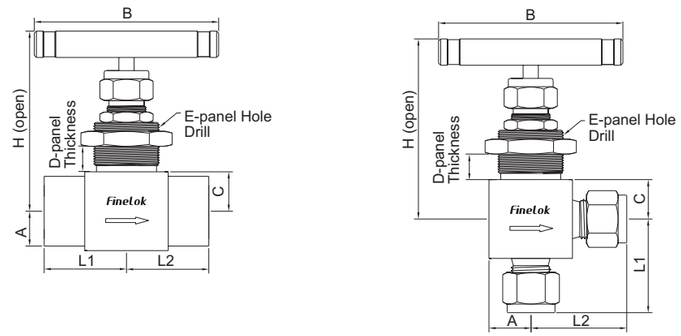

Basic Ordering Number	Connection Type and Size		Orifice in.(mm)	Cv	Dimension, in.(mm)							
	Inlet	Outlet			L1	L2	A	B	C	D	E	H
-100N-FNT2-4	1/8 Female NPT	1/8 Female NPT	0.157 (4.0)	0.35	1.13 (28.6)	1.13 (28.6)	0.53 (13.5)	2.17 (55)	0.53 (13.5)	0.25 (6.4)	0.96 (24.4)	2.85 (72.5)
-100N-FNT4-4	1/4 Female NPT	1/4 Female NPT										
-100N-FNT4-NT4-4	1/4 Female NPT	1/4 Male NPT										
-100N-NT4-4	1/4 Male NPT	1/4 Male NPT										
-100N-S4-4	1/4" FINELOK	1/4" FINELOK			1.41 (35.8)	1.41 (35.8)						
-100N-SM6-4	6 mm FINELOK	6 mm FINELOK										
-100N-SM8-4	8 mm FINELOK	8 mm FINELOK										
-100N-FS4-4	1/4" FS	1/4" FS			1.13 (28.6)	1.13 (28.6)						
-100N-FNT4-6	1/4 Female NPT	1/4 Female NPT	0.236 (6.0)	0.85	1.31 (33.4)	1.31 (33.4)	0.625 (15.88)	2.50 (63.5)	0.625 (15.88)	0.38 (9.7)	1.09 (27.7)	3.5 (88.9)
-100N-FNT6-6	3/8 Female NPT	3/8 Female NPT										
-100N-FNT8-6	1/2 Female NPT	1/2 Female NPT										
-100N-S6-6	3/8" FINELOK	3/8" FINELOK			1.41 (35.8)	1.41 (35.8)						
-100N-S8-6	1/2" FINELOK	1/2" FINELOK			1.52 (38.6)	1.52 (38.6)						
-100N-SM10-6	10 mm FINELOK	10 mm FINELOK			1.42 (36.1)	1.42 (36.1)						
-100N-SM12-6	12 mm FINELOK	12 mm FINELOK			1.52 (38.6)	1.52 (38.6)						
-100N-SM14-6	14 mm FINELOK	14 mm FINELOK			1.56 (39.7)	1.56 (39.7)						
-100N-FS6-6	3/8" FS	3/8" FS			1.31 (33.4)	1.31 (33.4)						
-100N-FS8-6	1/2" FS	1/2" FS										
-100N-MW12-6	12 mm MW	12 mm MW										
-100N-MW14-6	14 mm MW	14 mm MW										
-100N-FNT8-11	1/2 Female NPT	1/2 Female NPT	0.433 (11.0)	2.18	1.56 (39.6)	1.56 (39.6)	0.875 (22.2)	3.5 (88.9)	0.875 (22.2)	0.38 (9.7)	1.28 (32.5)	4.17 (106)
-100N-FNT12-11	3/4 Female NPT	3/4 Female NPT			1.63 (41.3)	1.63 (41.3)						
-100N-S12-11	3/4" FINELOK	3/4" FINELOK			1.97 (50.0)	1.97 (50.0)						
-100N-SM14-11	14 mm FINELOK	14 mm FINELOK										
-100N-SM16-11	16 mm FINELOK	16 mm FINELOK										
-100N-SM18-11	18 mm FINELOK	18 mm FINELOK										
-100N-MW14-11	14 mm MW	14 mm MW			1.56 (39.7)	1.56 (39.7)						
-100N-MW16-11	16 mm MW	16 mm MW										
-100N-MW16-MW14-11	16 mm MW	14 mm MW										

1. FINELOK means FINELOK double ferrule tube fittings, FS means fractional tube socket weld, MW means metric tube socket weld.
2. Sizes and types listed are standard. Other sizes and types are available upon request, refer to the nitrogen information.
3. Dimensions are shown with FINELOK nuts finger-tightened.All dimensions are for reference only and are subject to change. For dimensions not shown above, please contact the authorized representative or FINELOK.

Rometec srl - www.rometec.it - Rometec srl - www.rometec.it - Rometec srl - www.rometec.it

Rometec srl - www.rometec.it - Rometec srl - www.rometec.it - Rometec srl - www.rometec.it

Ordering Information

SS – 100N – FNT6 – S6 – W8WB – GYL – AS

Body Material	Series	Inlet Type	Inlet Size	Outlet Type / Outlet Size	Seat Material	Orifice Size	Tip Material	Stem Type	Packing Material	Panel Mounting	Handle	Flow Pattern	Special Application
SS 316 SS	100N	FNT Female NPT	2 1/8"	Same as Inlet / Specify in the same way as inlet type and inlet size	Same as Body	4 0.157" (4.0 mm)	Same as Body	Blunt	PTFE	No	Stainless Steel Bar	Straight	NO
6L 316L SS		NT Male NPT	4 1/4"		W Stellite	6 0.236" (6.0 mm)	W Stellite	R Regulating	P PEEK	Y Yes	C Red Aluminum Bar	A Angle	S NACE MR0175
S4 304 SS		FRT Female BSPT	6 3/8" or 6 mm			11 0.433" (11 mm)	INC Alloy 600	B Ball	G Graphite		F Green Aluminum Bar		
4L 304L SS		RT Male BSPT	8 1/2" or 8 mm				HC Alloy C-276				J Blue Aluminum Bar		
S1 321 SS		FMS Female Metric Thread (for RP)	10 10 mm								L Black Aluminum Bar		
91 F91		MS Male Metric Thread (for RG)	12 3/4" or 12 mm								O Black Knob		
92 F92		FRP Female BSPP (for RP)	14 14 mm or M14 x 1.5										
INC Alloy 600		BP Male BSPP (for RG)	16 1" or 16 mm										
HC Alloy C -276		FS Fractional Tube Socket Weld	18 18 mm										
904L 904L SS		MW Metric Tube Socket Weld	20 1 1/4" or 20 mm or M20 x 1.5										
		FB Fractional Tube Butt Weld	22 22 mm or M22 x 1.5										
		MB Metric Tube Butt Weld	24 M24 x 1.5										
		PS Pipe Socket Weld	25 25 mm										
		PB Pipe Butt Weld	27 M27 x 2										
		S Fractional Tube Fitting	28 28 mm										
		SM Metric Tube Fitting											
		UFB Nut + Gasket + Fractional Bulge Nipple											
		UMB Nut + Gasket + Metric Bulge Nipple											

Outside Screw and Yoke Globe Pattern Needle Valves

101N Series

Maximum working pressure: 10000 psig (689 bar)
Working temperature:
- PTFE: -65°F to 450°F (-54°C to 232°C)
- PEEK: -65°F to 500°F (-54°C to 260°C)
- Graphite: -65°F to 1200°F (-54°C to 649°C)

Standard seat diameter 4mm (0.16"). Cv: 0.35 standard

Features

- ☆ Hardened stem threads prevent galling
- ☆ Stem threads completely isolated from system media
- ☆ The nonrotating stem provides repetitive shutoff
- ☆ Back seat construction provides secondary stem sealing and prevents stem blowout
- ☆ Externally adjustable gland, independent of spindle thread
- ☆ Self centering non rotating spindle tip for bubble tight shut off
- ☆ Steady and durable fastening of the handle by double lock-pins
- ☆ Base mount option
- ☆ Leak-tight performance testing for every valve with nitrogen at 6000 psig

Pressure vs. Temperature

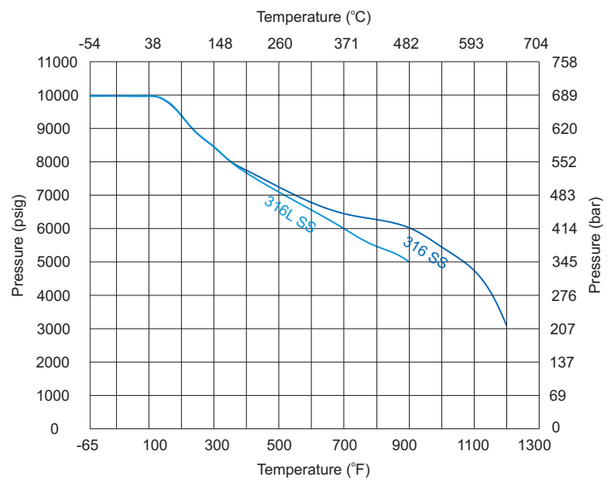

1. Graphs are based on graphite stem packing.
2. Contact the authorized representative or FINELOK for curve graph of other materials.

Rometec srl - www.rometec.it - Rometec srl - www.rometec.it - Rometec srl - www.rometec.it

Rometec srl - www.rometec.it - Rometec srl - www.rometec.it - Rometec srl - www.rometec.it

Standard Materials of Construction

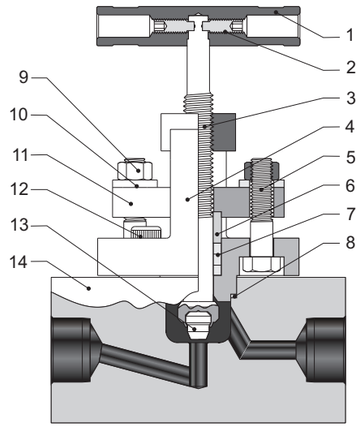

Item	Component	Valve Body Material
		316 SS
1	Handle	Stainless steel
2	Set Screw	Nickel cadmium-plated steel
3	Stem	Chrome-plated 316 SS/A276
4	Yoke	316 SS/A182
5	Bolt	Stainless steel
6	Packing Gland	316 SS/A276
7	Packing	PTFE or PEEK or graphite
8	Joint Seal	PTFE or graphite
9	Nut	Stainless steel
10	Gasket	Stainless steel
11	Gland Bridge	316 SS/A182
12	Bolt	Stainless steel
13	Stem Tip	316 SS/A276
14	Body	316 SS/A479
Lubricant		Molybdenum disulfide-based

Dimensions

Basic Ordering Number	Connection Type and Size		Orifice in.(mm)	Cv	Dimension, in.(mm)		
	Inlet	Outlet			L	A	H
-101N-FNT4	1/4 Female NPT	1/4 Female NPT	0.157 (4.0)	0.35	2.685 (68.2)	1.50 (38.1)	3.894 (98.9)
-101N-NT4	1/4 Male NPT	1/4 Male NPT			2.953 (75.0)		
-101N-NT4-FNT4	1/4 Male NPT	1/4 Female NPT					
-101N-FNT6	3/8 Female NPT	3/8 Female NPT			2.724 (69.2)		
-101N-NT6	3/8 Male NPT	3/8 Male NPT			2.953 (75.0)		
-101N-FNT8	1/2 Female NPT	1/2 Female NPT			3.00 (76.2)		
-101N-NT8	1/2 Male NPT	1/2 Male NPT			3.268 (82.0)		
-101N-NT8-FNT8	1/2 Male NPT	1/2 Female NPT					
-101N-SW8	1/2 PS	1/2 PS			3.00 (76.2)		
-101N-BW8	1/2 PB	1/2 PB			3.535 (89.8)		
-101N-S4	1/4" FINELOK	1/4" FINELOK			3.441 (87.4)		
-101N-S6	3/8" FINELOK	3/8" FINELOK			3.50 (88.9)		
-101N-S8	1/2" FINELOK	1/2" FINELOK			3.78 (96.0)		
-101N-SM6	6 mm FINELOK	6 mm FINELOK			3.441 (87.4)		
-101N-SM8	8 mm FINELOK	8 mm FINELOK					
-101N-SM12	12 mm FINELOK	12 mm FINELOK			3.78 (96.0)		

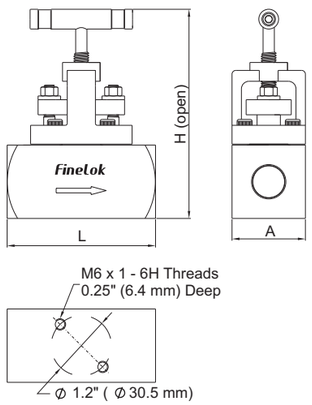

1. FINELOK means FINELOK double ferrule tube fittings.
2. Sizes and types listed are standard. Other sizes and types are available upon request, refer to the ordering information.
3. Dimensions are shown with FINELOK nuts finger-tightened. All dimensions are for reference only and are subject to change. For dimensions not shown above, please contact the authorized representative or FINELOK.

Ordering Information

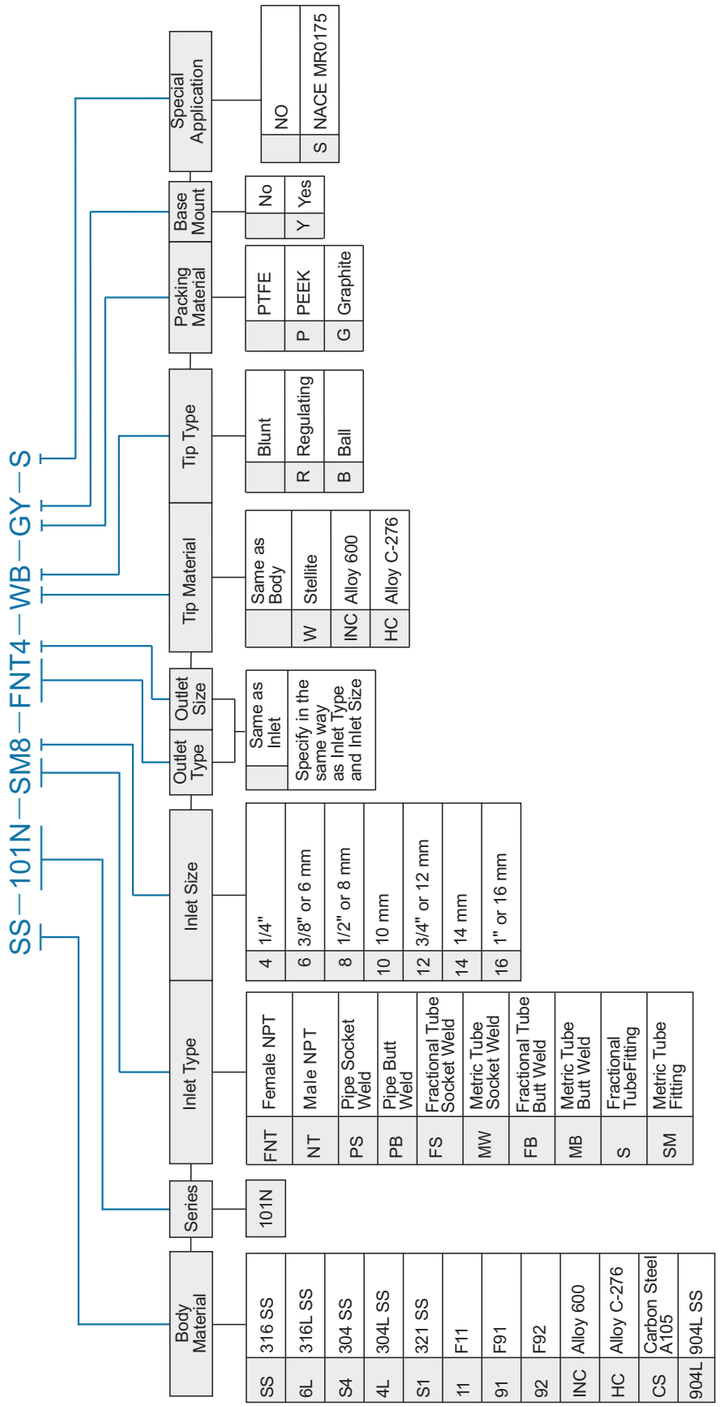

Rometec srl - www.rometec.it - Rometec srl - www.rometec.it - Rometec srl - www.rometec.it

Rometec srl - www.rometec.it - Rometec srl - www.rometec.it - Rometec srl - www.rometec.it

Integral–Bonnet Needle Valves

50N Series

Maximum working pressure:
- Stainless steel: 5000 psig (345 bar)
- Steel: 3000 psig (207 bar)
- Brass: 3000 psig (207 bar)

Working temperature:
- PTFE: -65°F to 450°F (-54°C to 232°C)
- PEEK: -65°F to 600°F (-54°C to 315°C)

Features

- ☆ Live-loaded packing system
- ☆ Compact design
- ☆ Rolled stem threads for longer valve life
- ☆ Easy external adjustments by packing nut
- ☆ Leak-tight performance testing for every valve with nitrogen at the maximum working pressure

Pressure vs. Temperature

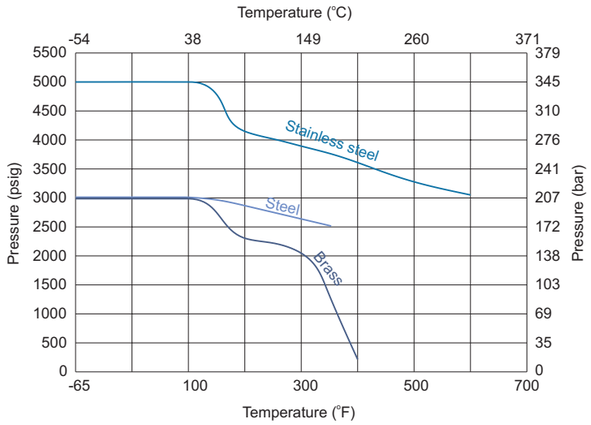

1. Graphs are based on PEEK stem packing.
2. 200°F (93°C) max with PCTFE stem tip (soft tip).
3. Contact the authorized representative or FINELOK for curve graph of other materials.

Flow Data at 100°F (38°C)

Regulating Stem

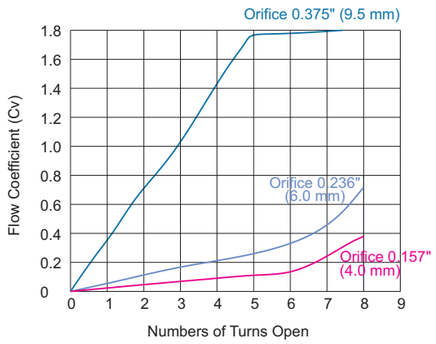

Standard Materials of Construction

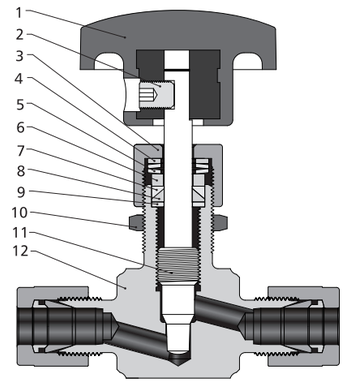

Stem Type

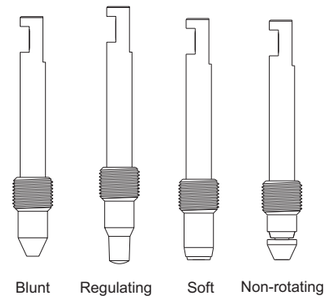

Item	Component	Valve Body Material		
		316 SS	Brass	Steel
1	Handle	Black knob or anodized aluminum or stainless steel		
2	Set Screw	Nickel cadmium-plated steel		
3	Packing Nut	316 SS/A276	Brass 360/B16	12L14/A108
4	Gland	304 SS/A276		
5	Packing Spring	S17700/A693		
6	Packing Gland	304 SS/A276		
7	Upper Packing	PTFE or PEEK		
8	Lower Packing			
9	Lower Gland	316 SS/A276		
10	Panle Nut	316 SS/B783		
11	Stem	Chrome-plated 316 SS/A276		
12	Body	316 SS/A182	Brass 377/B283	Chrome-plated 11L17/A108
Lubricant		Molybdenum disulfide-based and silicone-based		

Rometec srl - www.rometec.it - Rometec srl - www.rometec.it - Rometec srl - www.rometec.it

Rometec srl - www.rometec.it - Rometec srl - www.rometec.it - Rometec srl - www.rometec.it

Dimensions

Straight Pattern

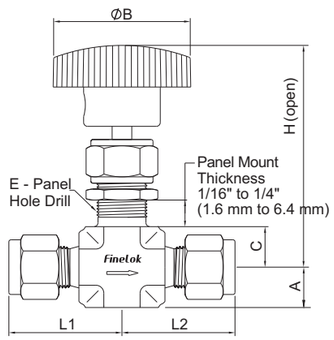

Angle Pattern

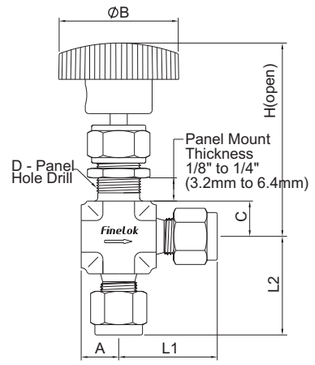

Basic Ordering Number	Connection Type and Size		Orifice in.(mm)	Cv	Dimension, in.(mm)						
	Inlet	Outlet			L1	L2	A	B	C	D	H
-50N-FNT2-2	1/8 Female NPT	1/8 Female NPT	0.08 (2.0)	0.09	0.81 (20.6)	0.81 (20.6)	0.31 (7.9)	1.0 (25.4)	0.44 (11.2)	0.47 (11.9)	2.28 (57.9)
-50N-S2-2	1/8" FINELOK	1/8" FINELOK			0.98 (25.0)	0.98 (25.0)					
-50N-SM3-2	3 mm FINELOK	3 mm FINELOK									
-50N-FNT2-4	1/8 Female NPT	1/8 Female NPT	0.157 (4.0)	0.35	0.81 (20.6)	0.81 (20.6)	0.41 (10.4)	1.38 (35.0)	0.44 (11.2)	0.53 (13.5)	2.50 (63.5)
-50N-NT2-4	1/8 Male NPT	1/8 Male NPT									
-50N-NT4-4	1/4 Male NPT	1/4 Male NPT			0.98 (25.0)	0.98 (25.0)					
-50N-S4-4	1/4" FINELOK	1/4" FINELOK			1.13 (28.7)	1.13 (28.7)					
-50N-SM6-4	6 mm FINELOK	6 mm FINELOK									
-50N-SM8-4	8 mm FINELOK	8 mm FINELOK			1.17 (29.7)	1.17 (29.7)					
-50N-FNT4-6	1/4 Female NPT	1/4 Female NPT	0.25 (6.4)	0.70	1.06 (26.9)	1.06 (26.9)	0.5 (12.7)	1.88 (47.8)	0.5 (12.7)	0.78 (19.8)	2.97 (75.4)
-50N-FNT6-6	3/8" Female NPT	3/8 Female NPT									
-50N-NT6-6	3/8 Male NPT	3/8 Male NPT			1.12 (28.4)	1.12 (28.4)					
-50N-NT8-6	1/2 Male NPT	1/2 Male NPT			1.50 (38.1)	1.50 (38.1)					
-50N-S6-6	3/8" FINELOK	3/8" FINELOK			1.29 (32.8)	1.29 (32.8)					
-50N-S8-6	1/2" FINELOK	1/2" FINELOK			1.4 (35.6)	1.4 (35.6)					
-50N-SM10-6	10 mm FINELOK	10 mm FINELOK			1.3 (33.0)	1.3 (33.0)					
-50N-SM12-6	12 mm FINELOK	12 mm FINELOK			1.4 (35.6)	1.4 (35.6)					
-50N-SM14-6	14 mm FINELOK	14 mm FINELOK			1.56 (39.7)	1.56 (39.7)					
-50N-MS20-6	M20 x 1.5 Male ISO	M20 x 1.5 Male ISO			1.50 (38.1)	1.50 (38.1)					
-50N-FNT8-10	1/2 Female NPT	1/2 Female NPT	0.375 (9.5)	1.80	1.50 (38.1)	1.50 (38.1)	0.75 (19.1)	3.00 (76.2)	0.75 (19.1)	1.03 (26.2)	3.91 (99.3)
-50N-FNT12-10	3/4 Female NPT	3/4 Female NPT			1.63 (41.3)	1.63 (41.3)					
-50N-NT12-10	3/4 Male NPT	3/4 Male NPT									
-50N-S8-10	1/2" FINELOK	1/2" FINELOK			1.90 (48.3)	1.90 (48.3)					
-50N-S12-10	3/4" FINELOK	3/4" FINELOK									
-50N-SM14-10	14 mm FINELOK	14 mm FINELOK									

1. FINELOK means FINELOK double ferrule tube fittings, ISO means metric thread,
2. Sizes and types listed are standard. Other sizes and types are available upon request, refer to the ordering information.
3. Dimensions are shown with FINELOK nuts finger-tightened.All dimensions are for reference only and are subject to change. For dimensions not shown above, please contact the authorized representative or FINELOK.

Ordering Information

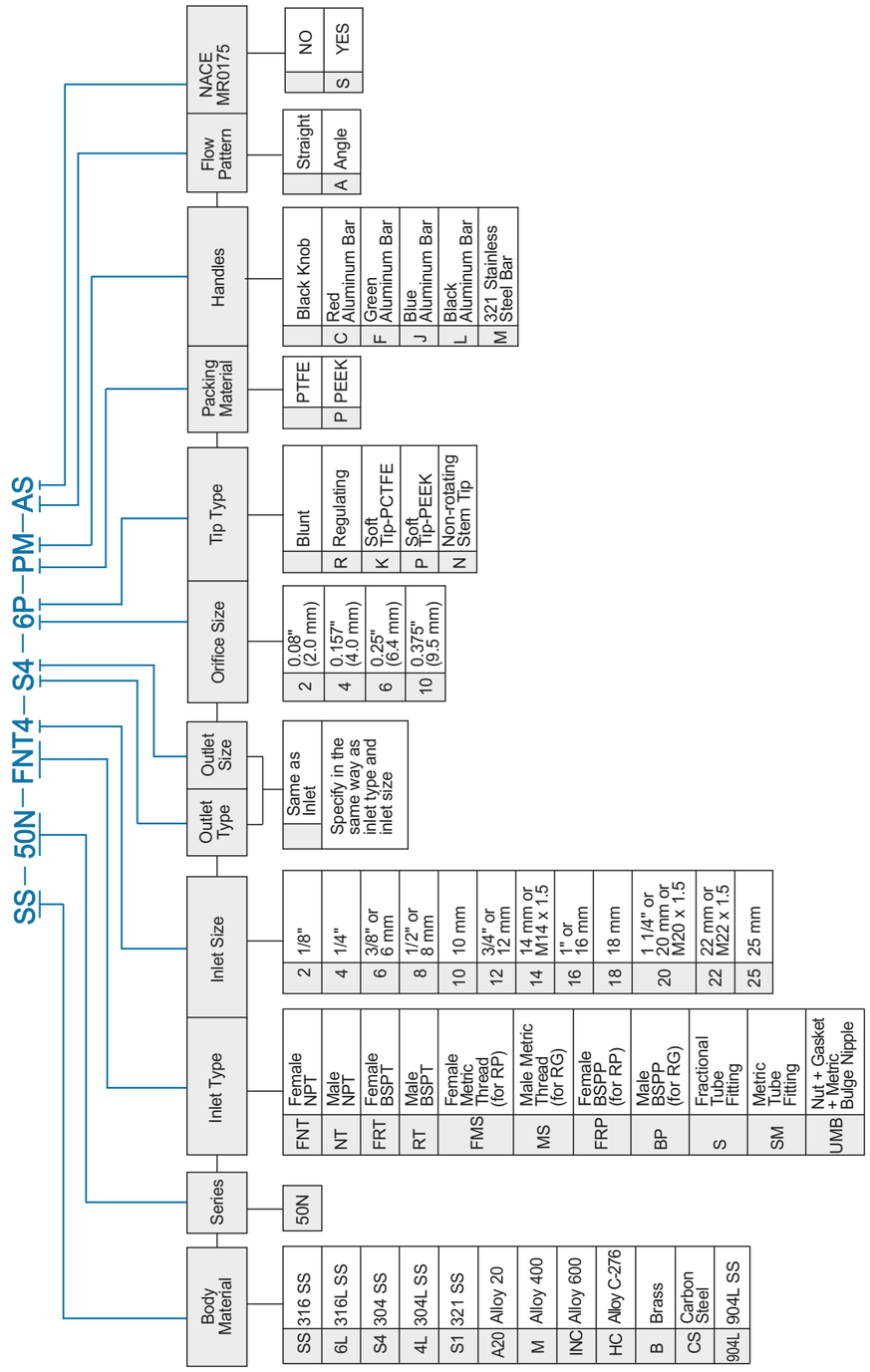

Rometec srl - www.rometec.it - Rometec srl - www.rometec.it - Rometec srl - www.rometec.it

Rometec srl - www.rometec.it - Rometec srl - www.rometec.it - Rometec srl - www.rometec.it

Nonrotating-stem Needle Valves

30N Series

Maximum working pressure: 3000 psig (207 bar)
Working temperature:
PCTFE stem tip: -20°F to 200°F (-28°C to 93°C)
PEEK stem tip: -20°F to 450°F (-28°C to 232°C)

Features

- ☆ Straight and angle pattern
- ☆ Compact design
- ☆ Nonrotating stem
- ☆ Special designed handle to stop contamination entering into the valve
- ☆ Leak-tight performance testing for every valve with nitrogen at the maximum working pressure

Pressure vs. Temperature

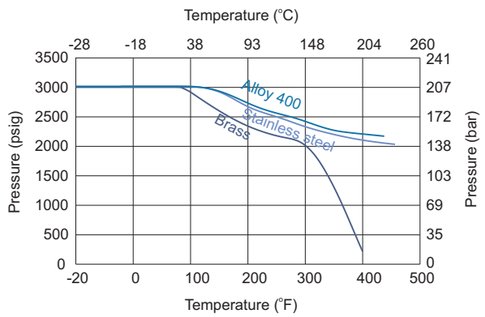

Flow Data at 100°F (38°C)

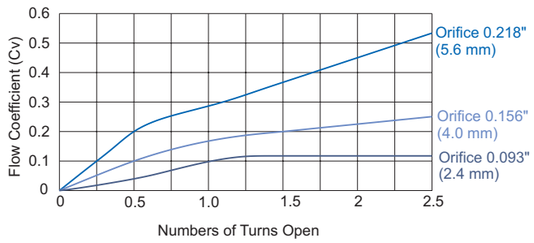

1. Temperature and pressure shown in the graphs are based on PEEK stem tip
2. Contact the authorized representative or FINELOK for curve graph of other materials.

Standard Materials of Construction

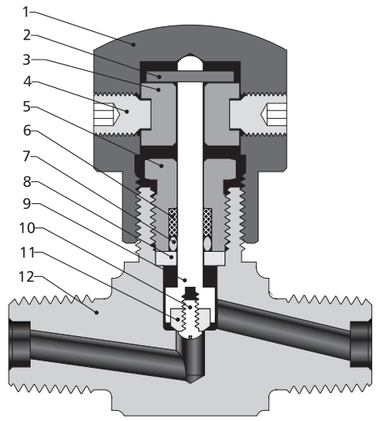

Item	Component	Valve Body Material				
		316 SS	304 SS	321 SS	Brass	Alloy 400
1	Handle	Anodized aluminum				
2	Stop Pin	Stainless steel				
3	Spool	Aluminum				
4	Set Screw	Nickel cadmium-plated steel				
5	Packing Bolt	316 SS/A276	304 SS/A276	321 SS/A276	Brass 360/B16	Alloy R-405/B164
6	Backup Ring	PTFE/D1710				
7	O-ring	Fluorocarbon FKM				
8	Washer	316 SS/A276				Alloy R-405/B164
9	Stem	316 SS/A276				Alloy R-405/B164
10	Machine Screw	316 SS/A276				Alloy R-405/B164
11	Stem Tip	PCTFE or PEEK				
12	Body	316 SS/A182	316 SS/A182	316 SS/A182	Brass 377/B283	Alloy 400/B564
Lubricant		Molybdenum disulfide-based				

Rometec srl - www.rometec.it - Rometec srl - www.rometec.it - Rometec srl - www.rometec.it

Rometec srl - www.rometec.it - Rometec srl - www.rometec.it - Rometec srl - www.rometec.it

Dimensions

Straight Pattern

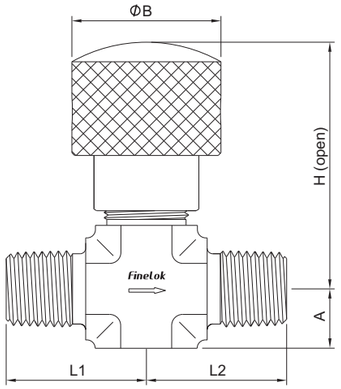

Angle Pattern

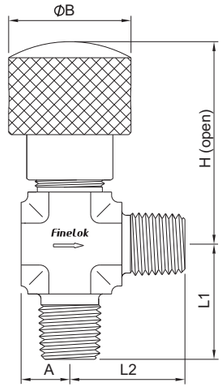

Basic Ordering Number	Connection Type and Size		Orifice in.(mm)	Cv	Dimension, in.(mm)				
	Inlet	Outlet			L1	L2	A	B	H
-30N-NT2-2	1/8 Male NPT	1/8 Male NPT	0.09 (2.4)	0.12	0.75 (19.0)	0.75 (19.0)	0.31 (7.9)	1.06 (26.9)	1.86 (47.2)
-30N-NT2-S2-2	1/8" Male NPT	1/8" FINELOK			0.75 (19.0)	1.1 (27.9)			
-30N-S2-2	1/8" FINELOK	1/8" FINELOK			1.1 (27.9)	1.1 (27.9)			
-30N-SM3-2	3 mm FINELOK	3 mm FINELOK							
-30N-FNT2-4	1/8 Female NPT	1/8 Female NPT	0.156 (4.0)	0.27	0.81 (20.6)	0.81 (20.6)	0.39 (9.9)	1.06 (26.9)	1.86 (47.2)
-30N-NT2-4	1/8 Male NPT	1/8 Male NPT			0.86 (21.8)	0.86 (21.8)			
-30N-NT4-4	1/4 Male NPT	1/4 Male NPT			25.0 (0.98)	25.0 (0.98)			
-30N-NT4-S4-4	1/4" Male NPT	1/4" FINELOK			25.0 (0.98)	1.13 (28.7)			
-30N-S4-4	1/4" FINELOK	1/4" FINELOK			1.13 (28.7)				
-30N-SM6-4	6 mm FINELOK	6 mm FINELOK							
-30N-SM8-4	8 mm FINELOK	8 mm FINELOK							
-30N-FNT4-6	1/4 Female NPT	1/4 Female NPT	0.218 (5.6)	0.53	1.06 (26.9)	1.06 (26.9)	0.5 (12.7)	1.12 (28.4)	2.02 (51.3)
-30N-FNT6-6	3/8 Female NPT	3/8 Female NPT							
-30N-NT6-6	3/8 Male NPT	3/8 Male NPT			1.12 (28.6)	1.12 (28.6)			
-30N-S6-6	3/8" FINELOK	3/8" FINELOK			1.29 (32.8)	1.29 (32.8)			
-30N-S8-6	1/2" FINELOK	1/2" FINELOK			1.4 (35.6)	1.4 (35.6)			
-30N-SM10-6	10 mm FINELOK	10 mm FINELOK			1.3 (33.0)	1.3 (33.0)			
-30N-SM12-6	12 mm FINELOK	12 mm FINELOK			1.4 (35.6)	1.4 (35.6)			
-30N-MS20-6	M20 x 1.5 Male ISO	M20 x 1.5 Male ISO			1.50 (38.1)	1.50 (38.1)			
-30N-MS22-6	M22 x 1.5 Male ISO	M22 x 1.5 Male ISO							

1. FINELOK means FINELOK double ferrule tube fittings, ISO means metric thread.
2. Sizes and types listed are standard. Other sizes and types are available upon request, refer to the ordering information.
3. Dimensions are shown with FINELOK nuts finger-tightened.All dimensions are for reference only and are subject to change. For dimensions not shown above, please contact the authorized representative or FINELOK.

Ordering Information

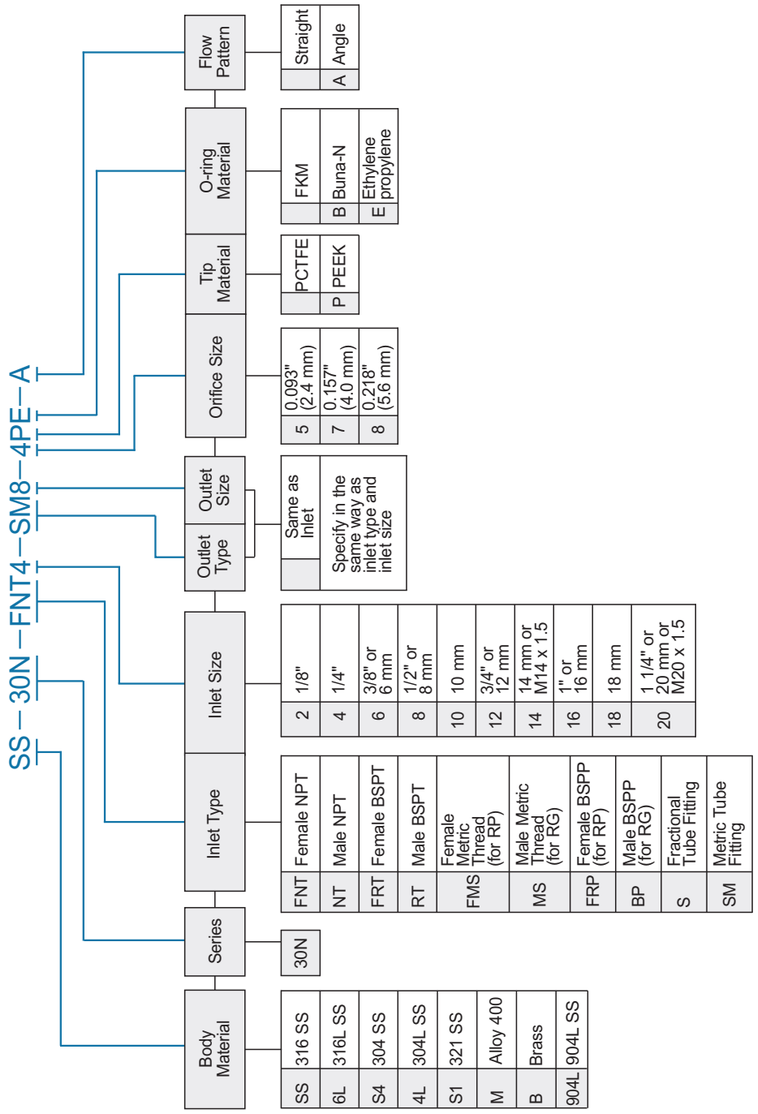

Rometec srl - www.rometec.it - Rometec srl - www.rometec.it - Rometec srl - www.rometec.it

Rometec srl - www.rometec.it - Rometec srl - www.rometec.it - Rometec srl - www.rometec.it

Toggle Valves

03N Series

Features

- ☆ Maximum working pressure: 300 psig (20.7 bar)
- ☆ Straight and angle pattern
- ☆ Compact design
- ☆ Quick opening or closing
- ☆ Nonrotating stem tip
- ☆ Leak-tight performance testing for every valve with nitrogen at the maximum working pressure

Technical Data

Orifice	Working Pressure at 100°F (38°C)
2.0 mm	300 psig
3.2 mm	
6.4 mm	200 psig

O-ring Material	Temperature Rating
FKM(Standard)	-20°F to 200°F (-28°C to 93°C)
Buna N	-20°F to 250°F (-28°C to 121°C)
Buna C	-65°F to 250°F (-54°C to 121°C)
Ethylene Propylene	-20°F to 250°F (-28°C to 121°C)

Standard Materials of Construction

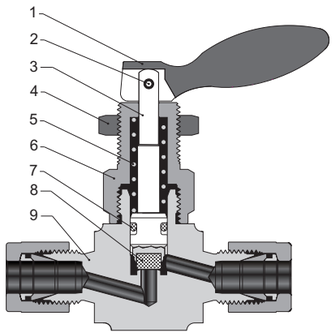

Item	Component	Valve Body Material			
		316 SS	304 SS	321 SS	Brass
1	Handle	Stainless steel			
2	Pin	Stainless steel			
3	Stem	316 SS/A276	304 SS/A276		
4	Panel Nut	316 SS/B783			Brass 360/B16
5	Spring	PTFE-plated S17700/A313			
6	Bonnet	316 SS/A276	304 SS/A276	321 SS/A276	Brass 360/B16
7	O-ring	Fluorocarbon FKM			
8	Stem Tip	PTFE/D1710			
9	Body	316 SS/A182	304 SS/A182	321 SS/A182	Brass 377/B283
Lubricant		Molybdenum disulfide-based and silicone-based			

Dimensions

Straight Pattern

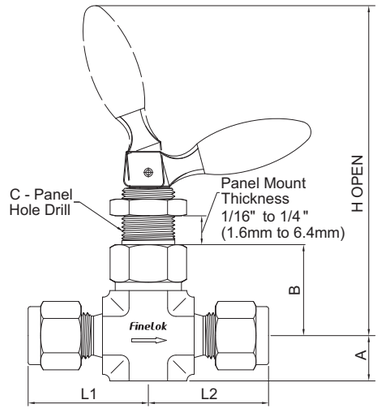

Angle Pattern

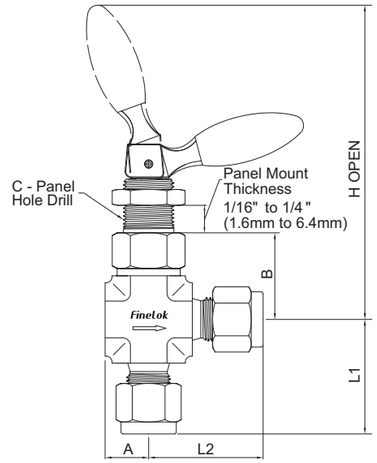

Basic Ordering Number	Connection Type and Size		Orifice in.(mm)	Cv	Dimension, in.(mm)					
	Inlet	Outlet			L1	L2	A	B	C	H
-03N-NT2-2	1/8 Male NPT	1/8 Male NPT	0.08 (2.0)	0.11	0.75 (19.0)	0.75 (19.0)	0.31 (7.9)	0.92 (23.4)	0.53 (13.5)	2.87 (72.9)
-03N-NT2-S2-2	1/8 Male NPT	1/8" FINELOK			0.75 (19.0)	0.98 (25.0)				
-03N-S2-2	1/8" FINELOK	1/8" FINELOK			0.98 (25.0)	0.98 (25.0)				
-03N-SM3-2	3 mm FINELOK	3 mm FINELOK								
-03N-FNT2-3	1/8 Female NPT	1/8 Female NPT	0.125 (3.2)	0.20	0.81 (20.6)	0.81 (20.6)	0.39 (9.9)	0.92 (23.4)	0.53 (13.5)	2.87 (72.9)
-03N-NT2-3	1/8 Male NPT	1/8 Male NPT			0.86 (21.8)	0.86 (21.8)				
-03N-NT4-3	1/4 Male NPT	1/4 Male NPT			25.0 (0.98)	25.0 (0.98)				
-03N-NT4-S4-3	1/4 Male NPT	1/4" FINELOK			25.0 (0.98)	1.13 (28.7)				
-03N-S4-3	1/4" FINELOK	1/4" FINELOK			1.13 (28.7)					
-03N-SM6-3	6 mm FINELOK	6 mm FINELOK								
-03N-SM8-3	8 mm FINELOK	8 mm FINELOK								
-03N-FNT4-6	1/4 Female NPT	1/4 Female NPT	0.25 (6.4)	0.70	1.06 (26.9)	1.06 (26.9)	0.5 (12.7)	1.06 (26.9)	0.66 (16.8)	3.56 (90.4)
-03N-FNT6-6	3/8 Female NPT	3/8 Female NPT								
-03N-NT6-6	3/8 Male NPT	3/8 Male NPT			1.12 (28.4)	1.12 (28.4)				
-03N-S6-6	3/8" FINELOK	3/8" FINELOK			1.29 (32.8)	1.29 (32.8)				
-03N-S8-6	1/2" FINELOK	1/2" FINELOK			1.4 (35.6)	1.4 (35.6)				
-03N-SM10-6	10 mm FINELOK	10 mm FINELOK			1.36 (34.5)	1.36 (34.5)				
-03N-SM12-6	12 mm FINELOK	12 mm FINELOK			1.46 (37.1)	1.46 (37.1)				
-03N-MS20-6	M20 x 1.5 Male ISO	M20 x 1.5 Male ISO			1.50 (38.1)	1.50 (38.1)				
-03N-MS22-6	M22 x 1.5 Male ISO	M22 x 1.5 Male ISO								

1. FINELOK means FINELOK double ferrule tube fittings, ISO means metric thread,
2. Sizes and types listed are standard. Other sizes and types are available upon request, refer to the ordering information.
3. Dimensions are shown with FINELOK nuts finger-tightened.All dimensions are for reference only and are subject to change. For dimensions not shown above, please contact the authorized representative or FINELOK.

Rometec srl - www.rometec.it - Rometec srl - www.rometec.it - Rometec srl - www.rometec.it

Rometec srl - www.rometec.it - Rometec srl - www.rometec.it - Rometec srl - www.rometec.it

Ordering Information

SS – 03N – FNT4 – S6 – 6E – A

Body Material

SS	316 SS
S4	304 SS
S1	321 SS
B	Brass
904L	904L SS

Series

03N

Inlet Type

FNT	Female NPT
NT	Male NPT
FRT	Female BSPT
RT	Male BSPT
FMS	Female Metric Thread (for RP)
MS	Male Metric Thread (for RG)
FRP	Female BSPP (for RP)
BP	Male BSPP (for RG)
S	Fractional Tube Fitting
SM	Metric Tube Fitting

Inlet Size

2	1/8"
4	1/4"
6	3/8" or 6 mm
8	1/2" or 8 mm
10	10 mm
12	3/4" or 12 mm
14	14 mm or M14 x 1.5
16	1" or 16 mm

Outlet Type / Outlet Size

	Same as Inlet

Specify in the same way as Inlet Type and Inlet Size

Orifice Size

2	0.08" (2.0 mm)
3	0.125" (3.2 mm)
6	0.25" (6.4 mm)

O-ring Material

	FKM
B	Buna N
C	Buna C
E	Ethylene propylene

Flow Pattern

	Straight
A	Angle

Rometec srl - www.rometec.it - Rometec srl - www.rometec.it - Rometec srl - www.rometec.it