Rometec srl - www.rometec.it - Rometec srl - www.rometec.it - Rometec srl - www.rometec.it

Full lift safety valve with spring loading. (AIT)

EN

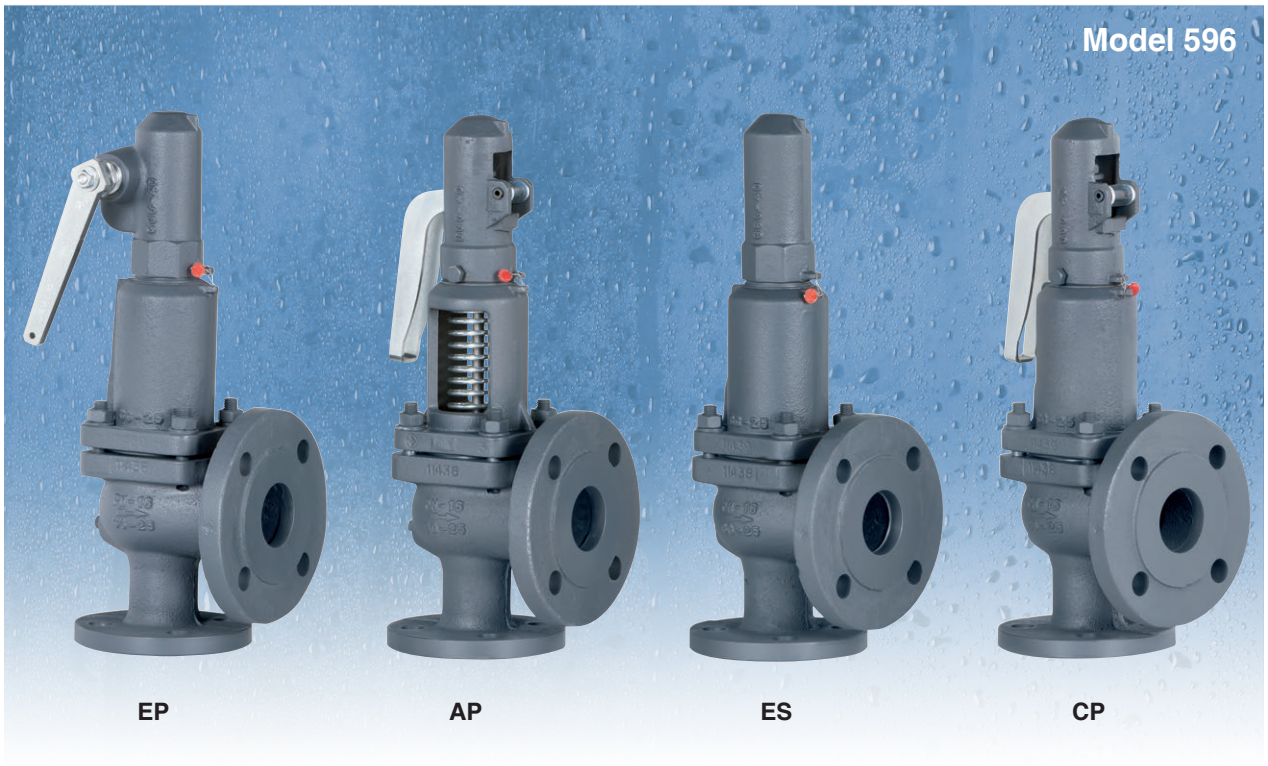

The valve works as an automatic pressure releasing regulator activated by the static pressure existing at the entrance to the valve and is characterized by its ability to open instantly and totally.

Design in accordance with “International Standard ISO 4126-1 Safety Valves”.
In accordance with the requirements of the pressure equipment directive 2014/68/EU.
EC valve verification certified by: TÜV Internacional Grupo TÜV Rheinland, S.L. EC 0035.
Type (Module D) EC examination report nº 33530455 certified by: TÜV Internacional Grupo TÜV Rheinland, S.L.
In compliance with the ATEX 2014/34/EU directive “Protective equipment and systems for use in potentially explosive atmospheres”.
Other authorisations: ISCIR, ITI, NASTHOL,EAC,...etc.

Specifications

— 90° angular flow.
— Activated by direc ed for their resistance to corrosion. With the exception of washers and couplings, the valves are free of non-ferric materials.
— Internal body designed to offer favourable flow profile.
— Sealing surfaces treated and balanced, making them extremely tightness, even exceeding EN 12266-1 requeriments.
— Great discharge capacity. For liquids typically used with openings similar to proportional safety valves.
— Equipped with draining screws for removing condensation.
— Auto-centering plug.
— Threaded shaft with lever positioner facilitating immediate manual action.
— Elevator, independent of the seal, designed facilitate sudden opening when the steam expands and, with any fluid, guarantees absolute opening and closing precision.
— All the valves are supplied sealed at the set pressure requested, simulating operational conditions, and are vigorously tested.
— All components are numbered, registered and checked. If requested in advance, material, casting, test and efficiency certificates will be enclosed with the valve, and the instruction manual, in accordance with P.E.D. 2014/68/EU.

Rometec srl - www.rometec.it - Rometec srl - www.rometec.it - Rometec srl - www.rometec.it

Rometec srl - www.rometec.it - Rometec srl - www.rometec.it - Rometec srl - www.rometec.it

IMPORTANT

1.- Blocking screw which facilitates hydrostatic testing of the container which to beprotected.
2.- Rapid limiter to reduce the coefficient of discharge
3.- Fluorelastomer (Vitón) seals, Silicone's rubber, PTFE (Teflón)... etc.,achieving leakage levels less than

$$0{,}3\times10^{-3}\frac{\text{Pa cm}^3}{\text{seg.}}$$

The ranges of application allow certain flexibility although we recommend limiting them to:

RANGE OF APPLICATION FOR THE SEALS					
FLUID		SET PRESSURE IN bar (0,2 – 1,8 – 4,0 – 4,8 – 7,0 – 30,0 – 62,0)			
Satured		S	V	T	
Liquids and gases		S		V	T
SEALS		TEMPERATURE IN °C			
		ACCORDING TO MANUFACTURERS		RECOMMENDED BY VYC	
		MINIMUM	MAXIMUM	MINIMUM	MAXIMUM
Silicone's rubber	S	-60	+200	-50	+115
Fluorelastomer (Vitón)	V	-40	+250	-30	+150
PTFE (Teflón)	T	-265	+260	-80	+230 (1)

(1) For temperatures exceeding 230°C apply metallic seal only

4.- Flourelastomer (Vitón) membrane and O-ring isolating the rotating or sliding parts from the working fluid.
5.- Electrical contact indicating open/closed.
6.- Balance bellows to:
- Protect the spring from atmospheric influences.
- Ensure outside of valve body is totally tightness.
- Level out external or self-generated back pressure.

7.- Possibility of manufacture in other types of material, for special operating conditions (high temperatures, fluids, etc.).
8.- Totally free of oil and grease, to work with oxygen, avoiding possible fire risks (UV-Oxygen-VBG 62).
9.- Special springs for critical temperatures.

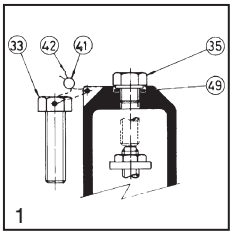

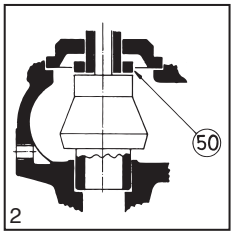

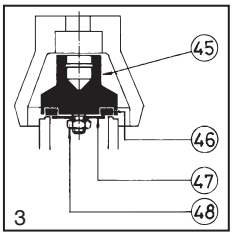

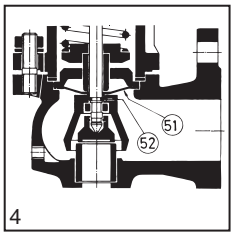

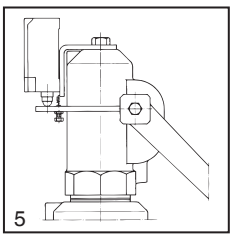

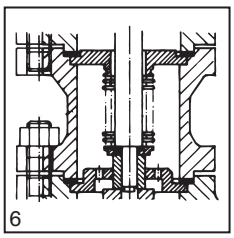

N.º PIECE	PIECE	MATERIAL	
		CAST STEEL	STAINLESS STEEL
1	Body	Cast steel (EN-1.0619+N)	Stainless steel (EN-1.4408)
2	Closed bell	Nodular iron (EN-5.3106)	Stainless steel (EN-1.4408)
3	Open bell	Cast steel (EN-1.0619+N)	Stainless steel (EN-1.4408)
4, 5, 6	Hood	Nodular iron (EN-5.3106)	Stainless steel (EN-1.4408)
7	Elevator	Nodular iron (EN-5.3106) (1)	Stainless steel (EN-1.4408)(7)
8	Cam	Carbon steel (EN-1.0037 St-37.2) (6)	Stainless steel (EN-1.4301)
9, 10	Lever	Carbon steel (EN-1.0037 St-37.2)	Carbon steel (EN-1.0037 St-37.2)
11	Seating	Stainless steel (EN-1.4028)	Stainless steel (EN-1.4542)
12	Plug	Stainless steel (EN-1.4028)	Stainless steel (EN-1.4542)
13	Lead	Stainless steel (EN-1.4028) (4)	Stainless steel (EN-1.4401) (5)
14	Spring press	Carbon steel (EN-1.1191)	Stainless steel (EN-1.4305)
15	Separator	Stainless steel (EN-1.4028)	Stainless steel (EN-1.4401)
16	Rod	Stainless steel (EN-1.4028)	Stainless steel (EN-1.4401)
17	Lever shaft	Carbon steel (EN-1.1191)	Stainless steel (EN-1.4305)
18	Gudgeon	Carbon steel (EN-1.1231)	Stainless steel (EN-1.4310)
19	Ring	Stainless steel (EN-1.4028)	Stainless steel (EN-1.4401)
20, 21	Safety ring	Stainless steel (EN-1.4310)	Stainless steel (EN-1.4310)
22	Spring	Vanadium chrome steel (EN-1.8159) (2)	Stainless steel (EN-1.4310) (3)
23	Gland	Carbon steel (EN-1.1191)	Stainless steel (EN-1.4305)
24	Hollow screw	Stainless steel (EN-1.4305)	Stainless steel (EN-1.4305)
25	Hollow screw nut	Stainless steel (EN-1.4305)	Stainless steel (EN-1.4305)
26	Buffer nut	Stainless steel (EN-1.4305)	Stainless steel (EN-1.4305)
27	Rod check nut	Carbon steel (EN-1.1141)	Stainless steel (EN-1.4401)
28, 29, 48	Nut	Carbon steel (EN-1.1141)	Stainless steel (EN-1.4401)
30, 31	Washer	Carbon steel (EN-1.1141)	Stainless steel (EN-1.4401)
32	Stud	Carbon steel (EN-1.1181)	Stainless steel (EN-1.4401)
33, 34, 35	Screw	Carbon steel (EN-1.1191)	Stainless steel (EN-1.4401)
36	Cap	Carbon steel (EN-1.1181)	Stainless steel (EN-1.4401)
38	Coupling	Graphite	PTFE (Teflón)
39	Coupling	PTFE (Teflón)	PTFE (Teflón)
40	Seal	Graphite	PTFE (Teflón)
41	Seal	Plastic	Plastic
42	Sealing wire	Sealing wire	Sealing wire
43	Characteristic plate	Stainless steel (EN-1.4301)	Stainless steel (EN-1.4301)
45	Plug	Stainless steel (EN-1.4401)	Stainless steel (EN-1.4401)
46	Sealing disk	PTFE (Teflón)	PTFE (Teflón)
		Silicone's rubber	Silicone's rubber
		Fluorelastomer (Vitón)	Fluorelastomer (Vitón)
47	Washer	Stainless steel (EN-1.4401)	Stainless steel (EN-1.4401)
49	Coupling	Copper	PTFE (Teflón)
50	Limiter	Stainless steel (EN-1.4028)	Stainless steel (EN-1.4401)
51	Membrane	Fluorelastomer (Vitón)	Fluorelastomer (Vitón)
52	O-ring	Fluorelastomer (Vitón)	Fluorelastomer (Vitón)
DN1x DN2		25x32 to 400x500	
PN		160	
OPERATING CONDITIONS	PRESSURE IN bar	62	62
	MAX. TEMP. IN °C	450ºC	400ºC
	MIN. TEMP. IN °C	-10	-60

(1) DN-25x32 in stainless steel (1.4408).
(2) DN-32x50 a DN-65x100 in stainless steel (1.4401).
(5) DN-25x32 from 38,00 to 50,00 bar in Spring steel (EN-10270-1-SH).
Vanadium-chrome (1.8159) from 400ºC. EP, ES and CP over 400ºC, especial spring.
Rest of them in Vanadium-chrome (1.8159)

Rometec srl - www.rometec.it - Rometec srl - www.rometec.it - Rometec srl - www.rometec.it

Rometec srl - www.rometec.it - Rometec srl - www.rometec.it - Rometec srl - www.rometec.it

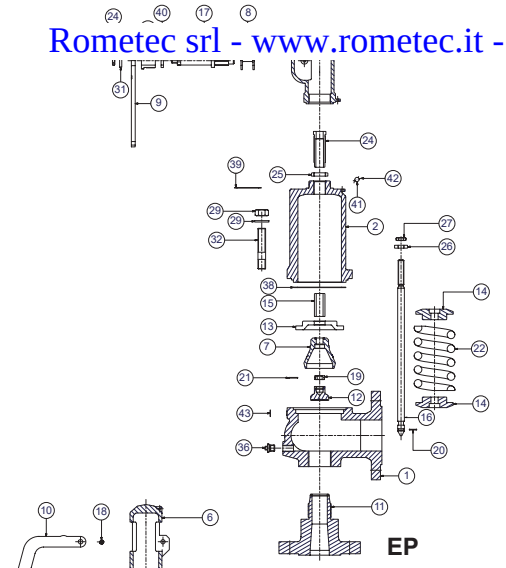

FULL LIFT SAFETY VALVE WITH SPRING LOADING (AIT) MODEL 596 - EP.

1.1 Disassembly.
To replace the spring (22), or clean any of the internal components of the valve, proceed in the following manner:
A - Move the lever (9) in direction C as far as the constructive catcher.
B - Unscrew the cap (4) and remove.
C - Holding the spindle (16) steady, loosen the hollow screw nut (25) and the hollow screw (24) until you note a realeasing of the spring (22).
D - Mark on the spindle (16) the position of the spindle lock-nut (27) and the adjusting nut (26). Loosen them and remove them.
E - Unscrew the nuts (29) and remove them, together with the studs (32) and their washers (30).
F - Lift the cover (2) and you will have access to all of the components.
1.2 Assembly.
A - Place the safety-ring (20) on the spindle (16) and press it against the gasket (12).
B - In the spindle channel (16) connect the ring (19) and fix it to the security-ring (21). Introduce the elevator (7) into the upper part of the spindle (16) and press this against the previously described pieces.
C - Enter the guide (13), the separator (15), the spring-press (14), the spring (22), the spring-press (14) through the upper part of the spindle (16) in a correlative manner.
D - Replace the assembly (38) and the cover (2).
E - Place the washers (30) on the studs (32) and make up the nuts (29) diagonally, checking the correct alignment of the cover (2).
F - Adjust the firing pressure with the hollow screw (24) and fix the adjustment position with the hollow screw nut (25).
G - Turn the spindle lock-nut (27) and the adjusting nut (26) to the position marked (see 1.1.D) and make up against each other.
H - Change the coupling (39) and lightly tighten the cap (4). Move the lever (9) towards position A as far as the constructive catcher. Definitively tighten the cap (4).
2. Adjustig the firing pressure.
A - Proceed according to points 1.1.A, 1.1.B, 1.1.C.
B - Proceed according to points 1.2.F, 1.2.H.

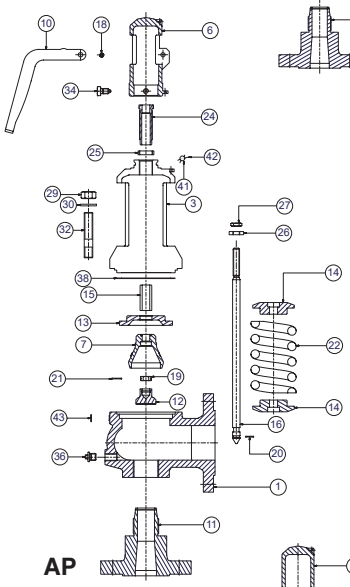

FULL LIFT SAFETY VALVE WITH SPRING LOADING (AIT) MODEL 596 - AP AND CP.

1. Disassembly and assembly.
1.1 Disassembly.
To replace the spring (22) or clean any of the internal components of the valve, proceed in the following manner:
A - Withdraw the clip (18), using a punching tool, until the lever (10) comes free.
B - Loosen the screws (34) and take the cap (6) off.
C - Holding the spindle (16) steady, loosen the hollow screw nut (25) and the holow screw (24) until you note a realasing of the spring (22).
D - Mark on the spindle (16) the position of the spindle lock-nut (27) and the adjusting nut (26). Loosen them and remove them.
E - Unscrew the nuts (29) and remove them, together with the studs (32) and their washers (30).
F - Lift the cover (3) or (2) and you will have access to all of the components.
1.2 Assembly.
A - Place the safety-ring (20) on the spindle (16) and press it against the gasket (12).
B - In the spindle channel (16) connect the ring (19) and fix it to the security-ring (21). IIntroduce the elevator (7) into the upper part of the spindle (16) and press this against the previously described pieces.
C - Enter the guide (13), the separator (15), the spring-press (14), the spring (22), the spring-press (14) through the upper part of the spindle (16) and press this against the previously descrobed pieces.
D - Replace the assembly (38) and the cover (3) or (2).
E - Place the washers (30) on the studs (32) and make up the nuts (29) diagonally, checking the correct alignment of the cover (3) or (2).
F - Adjust the firing pressure with the hollow screw (24) and fix the adjustment position with the hollow screw nut (25).
G - Turn the spindle lock-nut (27) and the adjusting nut (26) to the position mrked (see 1.1.D) and make up against each other.
H - Introduce the cap (6) and tighten the screws (34).
I - Place the lever (10) and fix it with the fastener (18).
2. Adjusting the firing pressure.
A - Proceed according to points 1.1.A, 1.1.B, 1.1.C.
B - Proceed according to points 1.2.F, 1.2.H, 1.2.I.

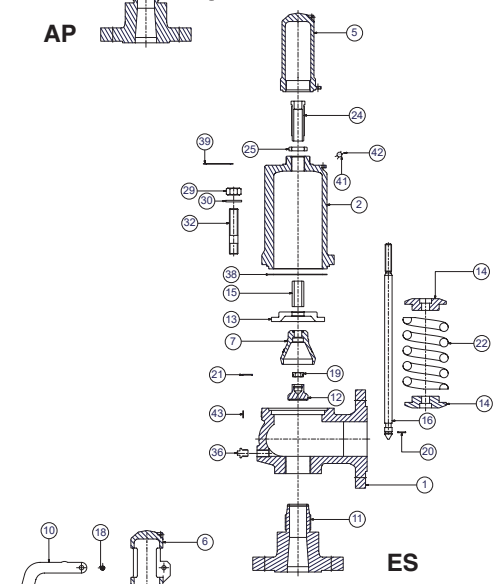

FULL LIFT SAFETY VALVE WITH SPRING LOADING (AIT) MODEL 596 - ES.

1. Disassembly and assembly.
1.1 Disassembly.
To replace the spring (22), or clean any of the internal components of the valve, proceded in the following manner:
A - Unscrew the cap (5) and remove.
B - Holding the spindle (16) steady, loosen the hollow screw nut (25) and the hollow screw (24) until you note a realeasing of the spring (22).
C -Unscrew the nuts (29) and remove them, together with the studs (32) and their washers (30).
F- Lift the cover (2) and you will have access to all of the components.
1.2 Assembly.
A - Place the safety-ring (20) on the spindle (16) and press it against the gasket (12).
B - In the spindle channel (16) connect the ring (19) and fix it to the security-ring (21).
Introduce the elevator (7) into the upper part of the spindle (16) and press this against the previously described pieces.
C - Enter the guide (13), the separator (15), the spring-press (14), the spring (22), the spring-press (14) through the upper part of the spindle (16) in a correlative manner.
D - Replace the washers (38) and the cover (2).
E - Place the washers (30) on the studs (32) and make up the nuts (29) diagonally, checking the correct alignment of the cover (2).
F - Adjust the firing pressure with the hollow screw (24) and fix the adjustment position with the hollow screw nut (25).
G - Change the coupling (39) and tighten the cap (5).
2. Adjusting the firing pressure.

Rometec srl - www.rometec.it - Rometec srl - www.rometec.it - Rometec srl - www.rometec.it

Rometec srl - www.rometec.it - Rometec srl - www.rometec.it - Rometec srl - www.rometec.it

do			16				20				25				32				40				50				63				
Ao			201				314				491				804				1257				1964				3117				
H			395				415				470				540				660				685				795				
h1			150				150				175				175				225				225				225				
L1			95				100				110				130				145				155				190				
L2			110				110				115				140				150				160				180				
R			1/4”				1/4”				1/4”				1/4”				1/4”				3/8”				3/8”				
			Whitworth gas-tight cylindrical fe																												
INTAKE FLANGE	PN-160 EN 1092-1 (1) (2) (3) (4)	D1	140				140				155				170				195				220				230				
		K1	100				100				110				125				145				170				180				
		l1	18				18				22				22				26				26				26				
		b1	22				22				24				25				27				31				33				
		DRILLS Nº	4				4				4				4				4				8				8				
ESCAPE FLANGE	PN-40 EN 1092-1 (1) (2)	D2	140				150				165				185				200				235				270				
		K2	100				110				125				145				160				190				220				
		l2	18				18				18				18				18				22				26				
		b2	18				18				20				22				24				24				26				
		DRILLS Nº	4				4				4				4				8				8				8				
MODEL			EP	AP	ES	CP	EP	AP	ES	CP	EP	AP	ES	CP	EP	AP	ES	CP	EP	AP	ES	CP	EP	AP	ES	CP	EP	AP	ES	CP	
WEIGHT IN kgs.	CAST STEEL STAINLESS STEEL		12,00	11,40	11,60	11,80	14,00	13,40	13,60	13,80	19,00	18,40	18,60	18,80	28,00	27,40	27,60	27,80	40,00	39,40	39,60	39,80	50,00	49,40	49,60	49,80	80,00	79,40	79,60	79,80	
CODE	CAST STEEL 2002-596.		0344	03441	03442	03443	0104	01041	01042	01043	0144	01441	01442	01443	0124	01241	01242	01243	0204	02041	02042	02043	0224	02241	02242	02243	0304	03041	03042	03043	
	STAINLESS STEEL 2002-596.		0342	03421	03422	03423	0102	01021	01022	01023	0142	01421	01422	01423	0122	01221	01222	01223	0202	02021	02022	02023	0222	02221	02222	02223	0302	03021	03022	03023	

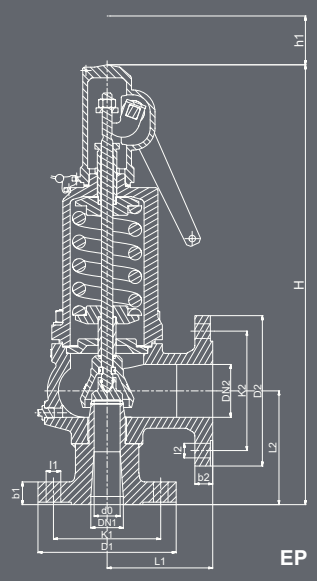

EP

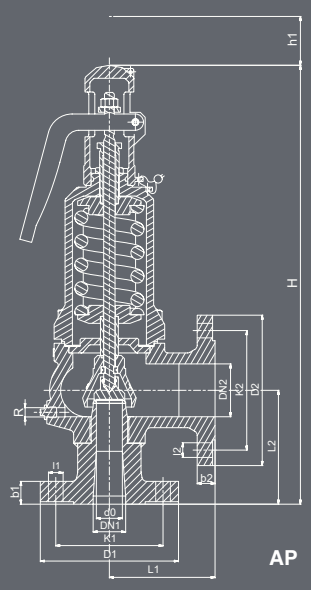

AP

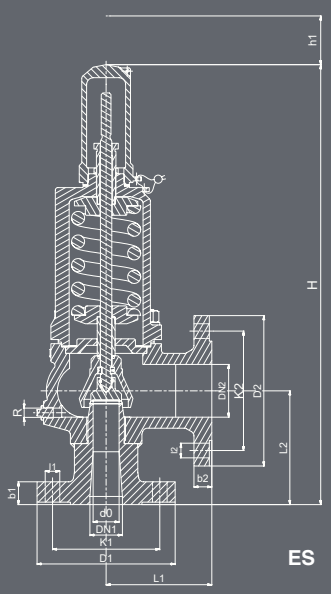

ES

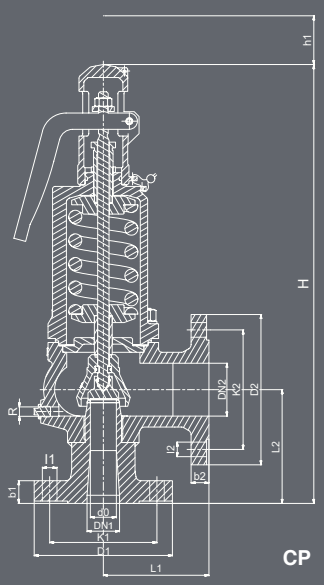

CP

Rometec srl - www.rometec.it - Rometec srl - www.rometec.it - Rometec srl - www.rometec.it

Rometec srl - www.rometec.it - Rometec srl - www.rometec.it - Rometec srl - www.rometec.it

	77				93				110				155				180				220				280			
	4657				6793				9503				18870				25450				38010				61575			
	835				990				1185				1285				1400				1575				1900			
	225				300				385				400				420				522				590			
	210				215				225				265				300				335				375			
	200				220				245				290				340				370				415			
	3/8”				1/2”				1/2”				1/2”				3/4”				3/4”				3/4”			
male thread ISO 228/1 (DIN-259)																												
	250				295				300				360				425				485				620			
	200				240				250				310				370				430				550			
	26				30				26				26				30				30				36			
	27				34				28				30				32				34				40			
	8				8				8				12				12				16				16			
	300				360				395				445				505				565				670			
	250				310				350				400				460				515				620			
	26				26				22				22				22				26				26			
	28				30				26				26				26				26				28			
	8				12				12				12				16				16				20			
	EP	AP	ES	CP	EP	AP	ES	CP	EP	AP	ES	CP	EP	AP	ES	CP	EP	AP	ES	CP	EP	AP	ES	CP	EP	AP	ES	CP
	126,00	125,40	125,60	125,80	135,00	134,40	134,60	134,80	170,00	169,40	169,60	169,80	270,00	269,40	269,60	269,80	370,00	369,40	369,60	369,80	480,00	479,40	479,60	479,80	660,00	659,40	659,60	659,80
	0404	04041	04042	04043	0504	05041	05042	05043	0604	06041	06042	06043	0804	08041	08042	08043	0004	00041	00042	00043	0024	00241	00242	00243	0064	00641	00642	00643
	0402	04021	04022	04023	0502	05021	05022	05023	0602	06021	06022	06023	0802	08021	08022	08023	0002	00021	00022	00023	0022	00221	00222	00223	0062	00621	00622	00623

Escape flange
(1) DN-125x200 PN-25
(2) From DN-150x250 to DN-400x500 PN-10

Intake flange
(1) DN-32x50 and DN-80x125 PN-100
(2) From DN-100x150 to DN-125x200 PN-63
(3) DN-150x250 PN-40
(4) From DN-200x300 PN-25

RECOMMENDED RANGES OF APPLICATION						
MODEL			EP	AP (1)	ES	CP (1)
FLUID		SATURATED STEAM	✱	✱		✱
		GASES	✱		✱	
		LIQUIDS	✱		✱	
PERMISSIBLE BACK PRESSURE IN % OF SET PRESSURE	INTERNAL OR GENERATED	SATURATED STEAM GASES	15			
		LIQUIDS	—			
	EXTERNAL VARIABLE (1)	SATURATED STEAM GASES	5			
		LIQUIDS	—			
	EXTERNAL CONSTANT (1) (2) (3)	SATURATED STEAM GASES	50			
		LIQUIDS	90			
% OVERPRESSURE		SATURATED STEAM GASES	10			
		LIQUIDS	25			

OPEN AND CLOSED PRESSURES IN % OF SET PRESSURE			
FLUID	PRESSURE IN bar	OPENING PRESSURE	CLOSING PRESSURE
SATURATED STEAM	<3	+5%	- 0,3 bar
GASES	≥3	+5%	- 10 %
LIQUIDS	<3	+10%	- 0,6 bar
	≥3	+10%	- 20 %

(1) If external backpressure exists, the AP and CP model cannot be used.
(2) With external constant backpressure, the spring is adjusted deducting the backpressure from the set pressure.
(3) If the set pressure < 3 bar we must consider the total atmospheric pressure (1 bar) as external constant backpressure being freely released.

If pa > 0,25p, we must limit plug speed with the consequent reduction of the ad coefficient of discharge.
With the new reduced coefficient we determine the d0, in order to remove the necessary volume.

pa = Backpressure permitted [bar] absolute
p = Set pressure [bar] absolute.
αd = Coefficient of discharge.

Rometec srl - www.rometec.it - Rometec srl - www.rometec.it - Rometec srl - www.rometec.it

Rometec srl - www.rometec.it - Rometec srl - www.rometec.it - Rometec srl - www.rometec.it

DN1 x DN2	25x32			25x40			32x50			40x65			50x80		
do	16			20			25			32			40		
$Ao=\frac{\pi \cdot do^2}{4}$	201			314			491			804			1257		
p [bar]	I - Saturated steam in Kg/h..														
	II - Air at 0°C and 1,013 bar in [Nm3/h].														
	III - Water at 20°C in l/h.														
SET PRESSURES IN bar	I	II	III	I	II	III	I	II	III	I	II	III	I	II	III
0,2															
0,5															
1,0															
1,5															
2,0															
2,5															
3,0															
3,5															
4,0															
4,5															
5,0															
5,5															
6,0															
6,5															
7,0															
7,5															
8,0															
9,0															
10,0															
11,0															
12,0															
13,0															
14,0															
15,0															
16,0															
17,0															
18,0															
20,0															
22,0															
24,0															
25,0															
26,0															
28,0															
30,0										10241	12006	93662	16011	18770	146435
32,0										10566	12780	96735	16520	19981	151239
34,0										10882	13555	99714	17013	21192	155896
36,0										11188	14329	102606	17492	22403	160417
38,0	2872	3776	26355	4486	5899	41171	7015	9224	64379	11487	15104	105418	17959	23614	164814
40,0	2944	3970	27039	4600	6201	42241	7192	9697	66052	11778	15878	108158	18413	24825	169098
42,0	3015	4163	27707	4711	6504	43284	7366	10170	67683	12061	16653	110830	18857	26036	173275
44,0	3085	4357	28360	4819	6806	44303	7535	10643	69277	12339	17428	113439	19291	27247	177354
46,0	3152	4551	28997	4925	7109	45299	7701	11116	70834	12610	18202	115989	19715	28458	181341
48,0	3219	4744	29621	5028	7411	46274	7863	11589	72358	12875	18977	118484	20130	29669	185242
50,0	3284	4938	30232	5130	7714	47228	8022	12062	73850	13136	19751	120928	20537	30880	189063
52,0	3348	5131	30831	5230	8016	48164	8178	12535	75313	13391	20526	123324	20935	32091	192808
54,0	3410	5325	31418	5327	8319	49081	8330	13008	76748	13641	21300	125673	21327	33302	196482
56,0	3472	5519	31995	5423	8621	49982	8481	13481	78157	13887	22075	127980	21711	34513	200088
58,0	3532	5712	32562	5518	8924	50867	8628	13954	79541	14128	22850	130246	22089	35724	203631
60,0	3591	5906	33118	5610	9226	51737	8773	14427	80901	14366	23624	132473	22460	36935	207113

$$V_L=\sqrt{\frac{\varrho_A}{\varrho_L}}\cdot V_A \text{ ó } V_A=V_L\cdot\sqrt{\frac{\varrho_L}{\varrho_A}}$$

V_A = Water flow according to table.
V_L = Liquid flow.
V_A = Water density at a 20°C. (V_A=998 Kg/m3).
V_L = Liquid density.

Rometec srl - www.rometec.it - Rometec srl - www.rometec.it - Rometec srl - www.rometec.it

DN1 x DN2	65x100			80x125			100x150			125x200			150x250		
do	50			63			77			93			110		
$Ao=\frac{\pi \cdot do^2}{4}$	1964			3117			4657			6793			9503		
p [bar]	I - Saturated steam in kg/h.. II - Air at 0°C and 1,013 bar in [Nm3/h]. III - Water at 20°C in l/h.						$V_L=\sqrt{\frac{\varrho_A}{\varrho_L}}.V_A$ ó $V_A=V_L.\sqrt{\frac{\varrho_L}{\varrho_A}}$						V_A = Water flow according to table. V_L = Liquid flow. V_A = Water density at a 20°C. (V_A=998 kg/m3). V_L = Liquid density.		
SET PRESSURE IN bar	I	II	III	I	II	III	I	II	III	I	II	III	I	II	III
0,2															
0,5															
1,0															
1,5															
2,0															
2,5															
3,0															
3,5															
4,0															
4,5															
5,0															
5,5															
6,0															
6,5															
7,0															
7,5															
8,0															
9,0															
10,0													49106	50353	553693
11,0													54124	54930	580753
12,0										42277	42538	433619	59142	59508	606607
13,0										45867	45810	451344	64165	64085	631404
14,0										49462	49082	468399	69194	68663	655262
15,0										53063	52354	484854	74232	73240	678282
16,0										56673	55626	500769	79282	77818	700546
17,0										60292	58898	516194	84345	82395	722124
18,0							29331	28527	281227	63921	62170	531171	89422	86973	743076
20,0							31767	31530	296450	69231	68715	559924	96850	96128	783300
22,0							34198	34533	310929	74530	75259	587271			
24,0				35654	37536	324763	35654	37536	324763	77703	81803	613399			
25,0				36360	39037	331463	36360	39037	331463	79242	85075	626055			
26,0				37053	40539	338031	37053	40539	338031						
28,0				38401	43542	350798	38401	43542	350798						
30,0	25017	29327	228797	39703	46544	363116	39703	46544	363116						
32,0	25811	31219	236304	40964	49547	375030	40964	49547	375030						
34,0	26582	33111	243579	42187	52550	386577	42187	52550	386577						
36,0	27331	35004	250644	43375	55553	397788	43375	55553	397788						
38,0	28060	36896	257514	44532	58556	408693	44532	58556	408693						
40,0	28770	38788	264207	45660	61559	419313	45660	61559	419313						
42,0	29463	40680	270733	46760	64562	429672									
44,0	30141	42572	277106	47835	67564	439786									
46,0	30803	44464	283336	48887	70567	449673									
48,0	31452	46356	289432	49916	73570	459348									
50,0	32087	48248	295402	50925	76573	468822									
52,0	32710	50140	301253												
54,0	33322	52032	306993												
56,0	33922	53924	312628												
58,0	34512	55816	318163												
60,0	35092	57709	323603												

DN1 x DN2	200x300			250x350			300x400			400x500		
do	155			180			220			280		
$Ao=\frac{\pi \cdot do^2}{4}$	18870			25450			38010			61575		
p [bar]	I - Saturated steam in kg/h.. II - Air at 0°C and 1,013 bar in [Nm3/h]. III - Water at 20°C in l/h.											
SET PRESSURE IN bar	I	II	III	I	II	III	I	II	III	I	II	III
0,2				11840	13398	202775	16966	19199	302848	27484	31102	490604
0,5				14703	16748	327368	21069	23999	488930	34131	38878	792052
1,0				19414	23261	466109	27820	33332	696141	45068	53997	1127727
1,5				24087	29076	572141	34516	41665	854502	55915	67496	1384266
2,0				28730	34891	661387	41169	49998	987792	66692	80995	1600192
2,5				33349	40706	739946	47788	58331	1105121	77414	94494	1790262
3,0				37948	46521	810930	54378	66664	1211137	88091	107993	1962004
3,5				42531	52337	876182	60945	74997	1308592	98729	121492	2119878
4,0				47099	58152	936900	67492	83330	1399276	109334	134992	2266783
4,5				51656	63967	993916	74021	91663	1484430	119912	148491	2404731
5,0				56202	69782	1047834	80536	99996	1564958	130466	161990	2535183
5,5				62894	75597	1099111	90126	108329	1641540	146001	175489	2659243
6,0				69508	81413	1148099	99602	116662	1714705	161353	188988	2777768
6,5				76063	87228	1195081	108997	124995	1784874			
7,0				82576	93043	1240285	118329	133328	1852386			
7,5	66031	73299	951951	89056	98858	1283898	127615	141661	1917523			
8,0	73572	77610	983225	99227	104673	1326077	142190	149994	1980519			
9,0	83050	86234	1042964									
10,0	92510	94857	1099462									
11,0												
12,0												
13,0												
14,0												
15,0												
16,0												
17,0												
18,0												
20,0												
22,0												
24,0												
25,0												
26,0												
28,0												
30,0												
32,0												
34,0												
36,0												
38,0												
40,0												
42,0												
44,0												
46,0												
48,0												
50,0												
52,0												
54,0												
56,0												
58,0												
60,0												

$$V_L=\sqrt{\frac{\varrho_A}{\varrho_L}}\cdot V_A \quad ó \quad V_A=V_L\cdot\sqrt{\frac{\varrho_L}{\varrho_A}}$$

V_A = Water flow according to table.
V_L = Liquid flow.
V_A = Water density at a 20°C. (V_A=998 kg/m3).
V_L = Liquid density.

Rometec srl - www.rometec.it - Rometec srl - www.rometec.it - Rometec srl - www.rometec.it

	DN_1 x DN_2		25x32	25x40	32x50	40x65	50x80	65x100	80x125	100x150	125x200	150x250	200x300
SET PRESSURES IN bar	MAXIMUM (LIQUIDS AND GASES)	PN-160	62	62	62	62	62	62	50	40	25	20	10
	MAXIMUM (SATURATED STEAM)	PN-160	62	62	62	62	62	62	50	40	25	20	10
	MINIMUM	STEAM AND GASES	38	38	38	30	30	30	23	18	12	9,5	7,5
		LIQUIDS	38	38	38	30	30	30	23	18	12	9,5	7,5
SPRING REGULATING RANGE IN bar	7,50 to 10,00	CODE											56569
	9,50 to 12,50	CODE										56566	
	12,00 to 16,00	CODE									56563	56567	
	15,00 to 20,00	CODE									56564	56568	
	18,00 to 25,00	CODE								56560	56565		
	23,00 to 32,00	CODE							56557	56561			
	30,00 to 40,00	CODE				56548	56551	56554	56558	56562			
	38,00 to 50,00	CODE	56542 56620	56544 56622	56546	56549	56552	56555	56559				
	48,00 to 62,00	CODE	56543 56621	56545 56623	56547	56550	56553	56556					

Spring steel EN-10270-1-SH
Vanadium-chrome steel EN-1.8159
Stainless steel EN-1.4310

	DN_1 x DN_2		250x350	300x400	400x500
SET PRESSURES IN bar	MAXIMUM (LIQUIDS AND GASES)	PN-160	8	7	6
	MAXIMUM (SATURATED STEAM)	PN-160	8	7	6
	MINIMUM	STEAM AND GASES	0,5	0,5	0,5
		LIQUIDS	0,2	0,2	0,2
SPRING REGULATING RANGE IN bar	0,20 to 0,68	CODE	56570	56579	56588
	0,66 to 1,00	CODE	56571	56580	56589
	0,95 to 1,40	CODE	56572	56581	56590
	1,30 to 1,90	CODE	56573	56582	56591
	1,80 to 2,60	CODE	56574	56583	56592
	2,50 to 3,60	CODE	56575	56584	56593
	3,50 to 5,00	CODE	56576	56585	56594
	4,80 to 6,30	CODE	56577	56586	56595
	6,00 to 8,00	CODE	56578	56587	

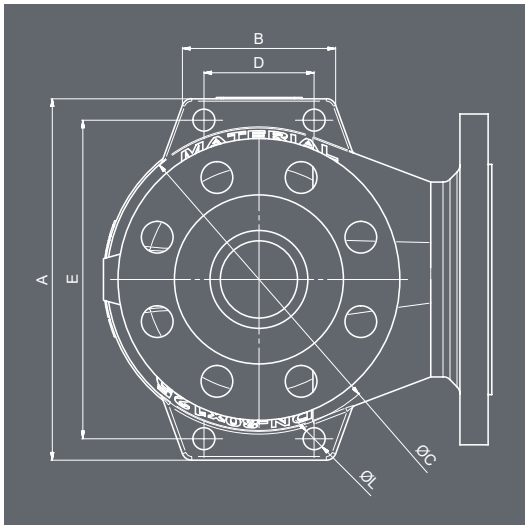

SUPPORT BRACKETS DIMENSIONS								
DN1xDN2	A	B	C	D	E	L	THICKNESS	DRILLS Nº
40x65	186	96	147	70	156	14	13,5	4xM12
50x80	210	98	166	70	180	14	14	4xM12
65x100	250	100	200	70	220	14	14	4xM12
80x125	295	125	248	90	260	18	16	4xM16
100x150	344	129	292	90	309	18	17	4xM16
125x200	374	129	309	90	339	18	17	4xM16
150x250	440	184	370	120	400	18	20	4xM16
200x300	530	188	459	130	494	23	20	4xM20
250x350	664	195	581	160	624	23	20	4xM20
300x400	710	215	616	180	655	23	23	4xM20

Rometec srl - www.rometec.it - Rometec srl - www.rometec.it - Rometec srl - www.rometec.it

Support brackets will only be drilled if specified by the customer

Rometec srl - www.rometec.it - Rometec srl - www.rometec.it - Rometec srl - www.rometec.it

DN1x DN2		25x32	25x40	32x50	40x65	50x80	65x100	80x125	100x150	125x200	150x250	200x300	250x350	300x400	400x500
do		16	20	25	32	40	50	63	77	93	110	155	180	220	280
h		7,00	9,00	12,00	12,00	18,00	18,00	20,00	29,00	34,40	36,80	56,15	64,80	79,20	100,80
h1		2,60	3,20	4,00	5,20	6,50	8,00	10,00	12,50	16,74	19,80	27,90	32,4	39,6	50,4
h/do		0,44	0,45	0,48	0,38	0,45	0,36	0,32	0,38	0,37	0,33	0,36	0,36	0,36	0,36
h1/do (1)		0,16	0,16	0,16	0,16	0,16	0,16	0,16	0,16	0,18	0,18	0,18	0,18	0,18	0,18
COEFFICIENT OF DISCHARGE kd	SATURATED STEAM GASES	0,78										0,74		0,71	
	LIQUIDS	0,60								0,52			—		
	LIQUIDS WITH RAPID LIMITER (1)	0,36											—		

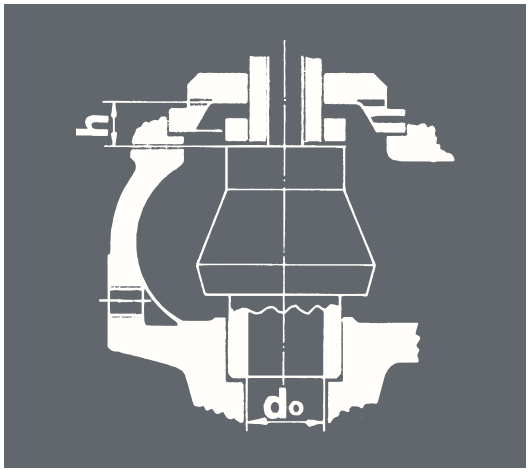

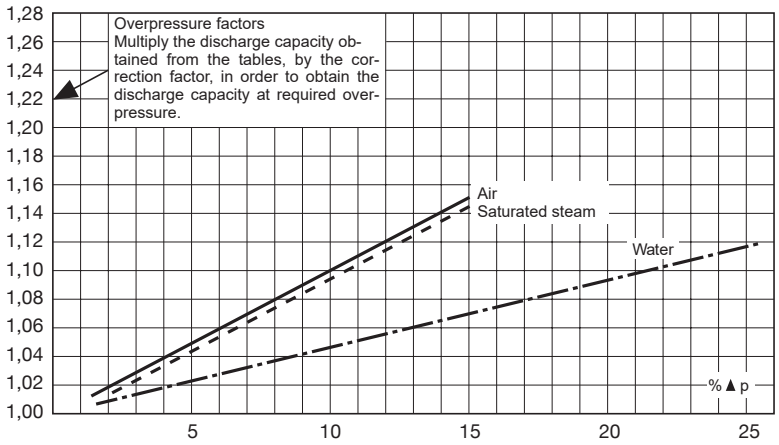

Liquids

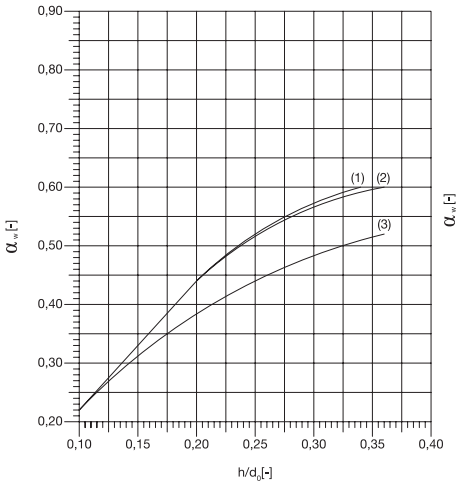

(1) d_0 16-63
(2) d_0 77
(3) d_0 93-155

Saturated steam
Gases

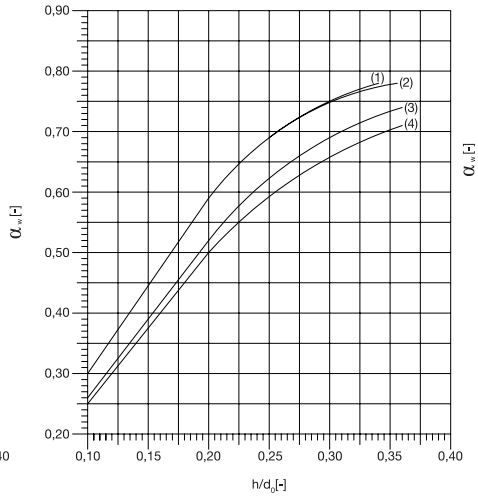

(1) d_0 16-77
(2) d_0 93-110
(3) d_0 155-180
(4) d_0 220-280

Saturated steam
Gases

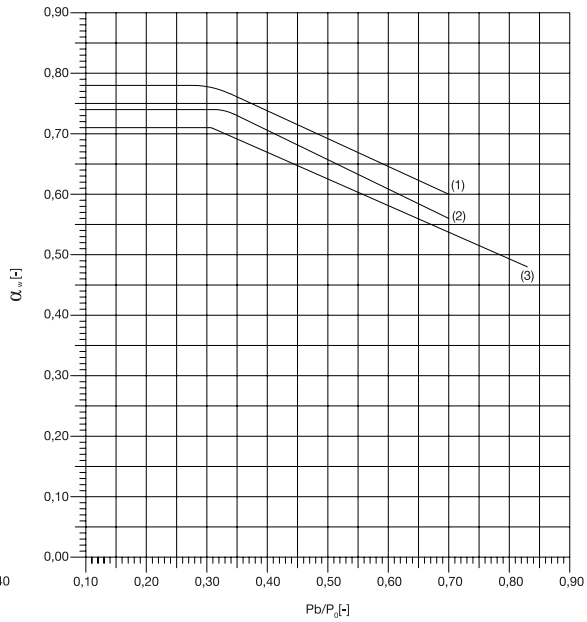

(1) d_0 16-110
(2) d_0 155-180
(3) d_0 220-280

Rometec srl - www.rometec.it - Rometec srl - www.rometec.it - Rometec srl - www.rometec.it