Thermostatic Purger

Threaded connection Model 443
Angular threaded connection Model 543
Connection between flanges Model 444

Model 443

Model 543

Model 444

To extract saturated or super-heated medium or low-pressure steam condensates.

Applicable to: steam piping, ironing machines, washing machines and dry cleaners, tanks and recipients with condensate discharges, cookers, sterilisers, exchangers, multi-daylight presses, vulcanisation autoclaves, calenders, pressure reducing equipment, etc.

Mod. 444 provided with centring ring for placing between flanges in accordance with standards EN, DIN, UNE, ANSI, BS, etc. DN-15 to 25.

Specifications

— Operates via a thermostatic valve that opens the way to cold air and water and condensates but which closes in the presence of condensates on the point of vapourising.
— Made entirely of stainless steel to resist wear, temperatures and corrosion. Fully recyclable.
— Long life cycle with high operating efficiency.
— Very simple three-part design to enable easier and faster maintenance than with other similar purgers.
— Simple to install, can be mounted in any position.
— Compact, robust. Much smaller and lighter than conventional purgers.
— Interior body designed for the required capacities in each case and to avoid over-dimensioning.
— Service conditions and flow direction markings on body.
— Continuous discharge.
— Also ideal for air elimination.
— Precise opening and closing, preventing steam losses.
— Totally silent.
— Insensitive to vibration, water hammers, reheated steam, corrosive condensate and icy conditions, etc.
— Protective shut-off surface filter designed to work at the same rate all over the surface. Guarantees a much higher filtering capacity than its competitors. Simple and fast access to filter.
— Treated closing surfaces, which are grinded, lapped and burnished in order to achieve a degree of water-tightness that even exceeds EN 12266-1 requirements.
— All purgers are rigorously tested and verified.
— Each component is numbered, registered and monitored. If previously requested, all the certificates for materials, castings, tests and performances will come with the purger.
— Mod. 444 with reduced assembly length in accordance with EN-558, basic series 49. Purger is provided with one single centring ring in accordance with the following standards: EN, DIN and UNE (PN-6, 10, 16, 25, and 40), ASA (ANSI) (PSI-150 [except for DN-15], 300) and others (NF, BS, etc.).

IMPORTANT
On order:
— Option for manufacturing in other materials for special working conditions (high temperatures, fluids, etc).
— Other connections.
— Insulating jackets to prevent radiation losses caused mainly by inclement weather conditions.
— The thermostatic element operates at 12° C below the temperature of the saturated steam.
Elements at 6° C or 24° C can be supplied on request.

EN ASME/FNPT ASME/SW ASME/ANSI

N° PART	PART	MATERIAL		
		MODEL 443	MODEL 543	MODEL 444
		STAINLESS STEEL		
1	Body	Stainless steel (EN-1.4301)		
2	Centring ring			Stainless steel (EN-1.4310)
3	Seat			Stainless steel (EN-1.4301)
4, 18	Filter	Stainless steel (EN-1.4301)		
5	Connection	Stainless steel (EN-1.4308)		
6	Angular connection		Stainless steel (EN-1.4308)	
7	Fixed base	Stainless steel (EN-1.4301)		
8	Fastening clip	Stainless steel (EN-1.4301)		
9	Washer	Stainless steel (EN-1.4301)		
10	Thermostatic element base	Stainless steel (EN-1.4301)		
11	Shut-off	Stainless steel (EN-1.4021)		
12	Membrane	Stainless steel (EN-1.4301)		
13	Thermostatic element cover	Stainless steel (EN-1.4301)		
14	Seal	PTFE (Teflon)		
15	Screw	Stainless steel (EN-1.4301)		
16	Nut	Stainless steel (EN-1.4401)		
17	Washer	Stainless steel (EN-1.4401)		
R		1/4” to 1” (GAS,NPT,SW)	1/2”(GAS,NPT,SW)	
DN				15 to 25 (EN, ANSI)
SERVVICE CONDITIONS	PN	40		
	MAX. ACCEPTABLE TEMPERATURE IN °C	300		
	MAXIMUM SERVICE PRESSURE IN bar	22		
	MAX. SERVICE TEMPERATURE IN °C	250		

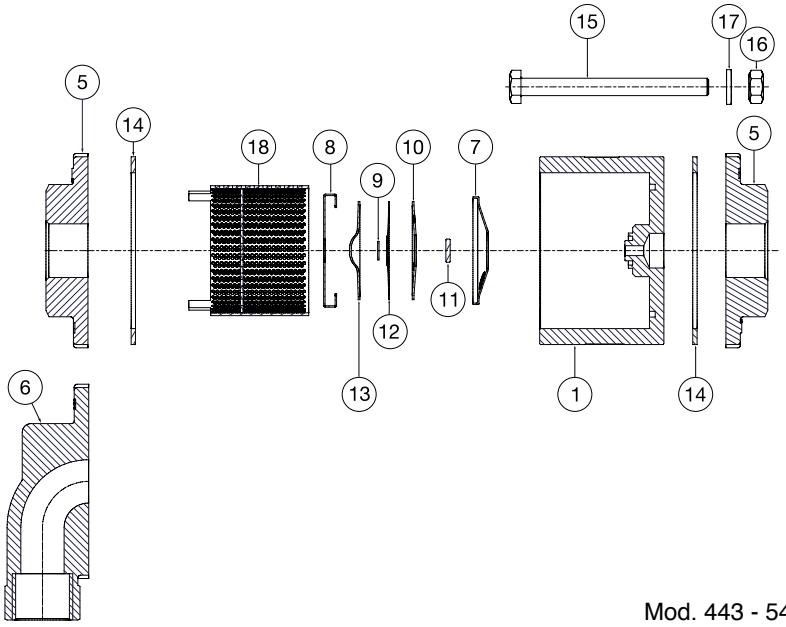

Mod. 443 - 543

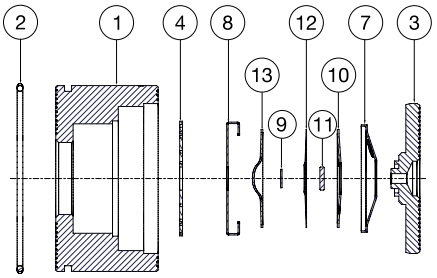

Mod. 444

MODEL		443					543	444		
P1		1/2"	3/8"	1/2"	3/4"	1"	1/2"			
CONNECTIONS		Female Gas Whitworth cylindrical thread ISO 228/1 from 1978 (DIN-259)								
		NPT thread, ANSI-B2.1								
		Ends for welding SW ANSI-B16.11								
DN								15	20	25
CONNECTIONS								Assembly between flanges:		
								EN,DIN and UNE (PN-6,10,16,25 and 40)		
								ASA(ANSI) (PSI 150[except DN-15],300)		
								Other standards (NF,BS, etc.)		
H		75,00	75,00	75,00	80,00	90,00	89,50	25,00	31,50	35,50
L		68	68	68	68	68	68	52	66	72
L1		34,00	34,00	34,00	34,00	34,00	34,00	25,00	27,25	32,25
WEIGHT IN Kg.		1,00	1,00	1,00	0,90	0,90	1,00	0,23	0,34	0,61
CODE 2108-	GAS	443.8042	443.8382	443.8022	443.8342	443.8102	543.8022			
	NPT	443.80421	443.83821	443.80221	443.83421	443.81021	543.80221			
	SW	443.80422	443.83822	443.80222	443.83422	443.81022				
	FLANGES							444.8022	444.8342	444.8102

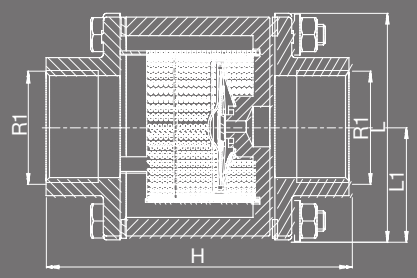

Mod. 443

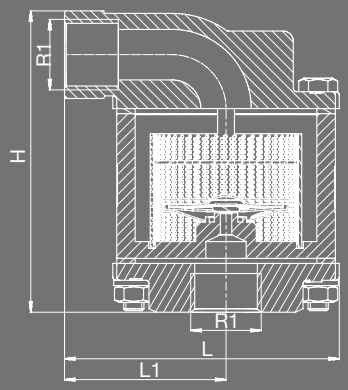

Mod. 543

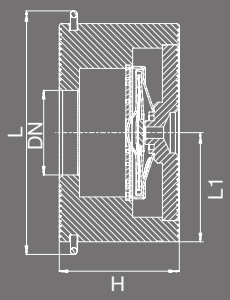

Mod. 444

Air.

Condensate.

Steam.

Operating principles

The thermostatic action of the balanced pressure element enables condensate and cold air to leave freely when starting up.
When the condensate temperature reaches that of saturation, the element closes and blocks the steam. When the condensate cools, the elements opens and evacuates it. When steam is on the point of appearing, the cycle is repeated and the element closes, and so on.

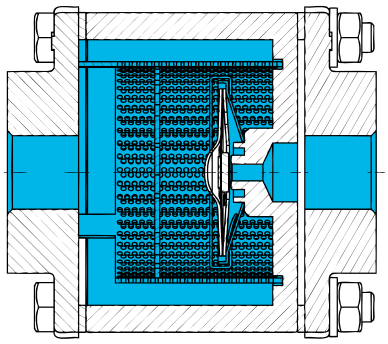

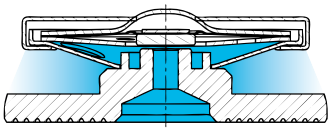

Open

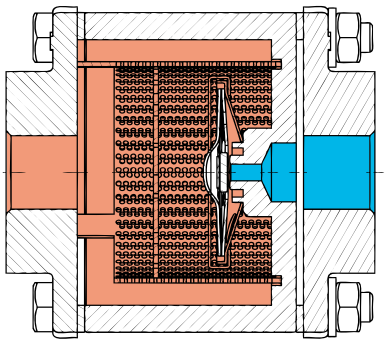

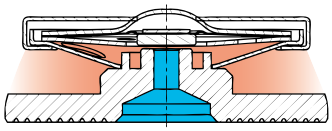

Starts to close

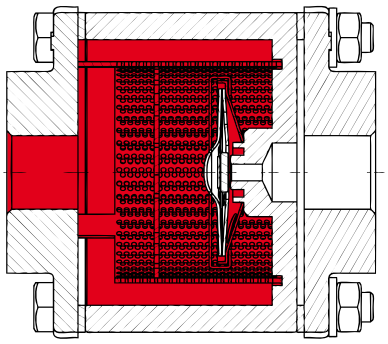

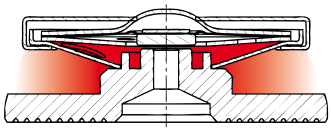

Completely closed

Flow diagram

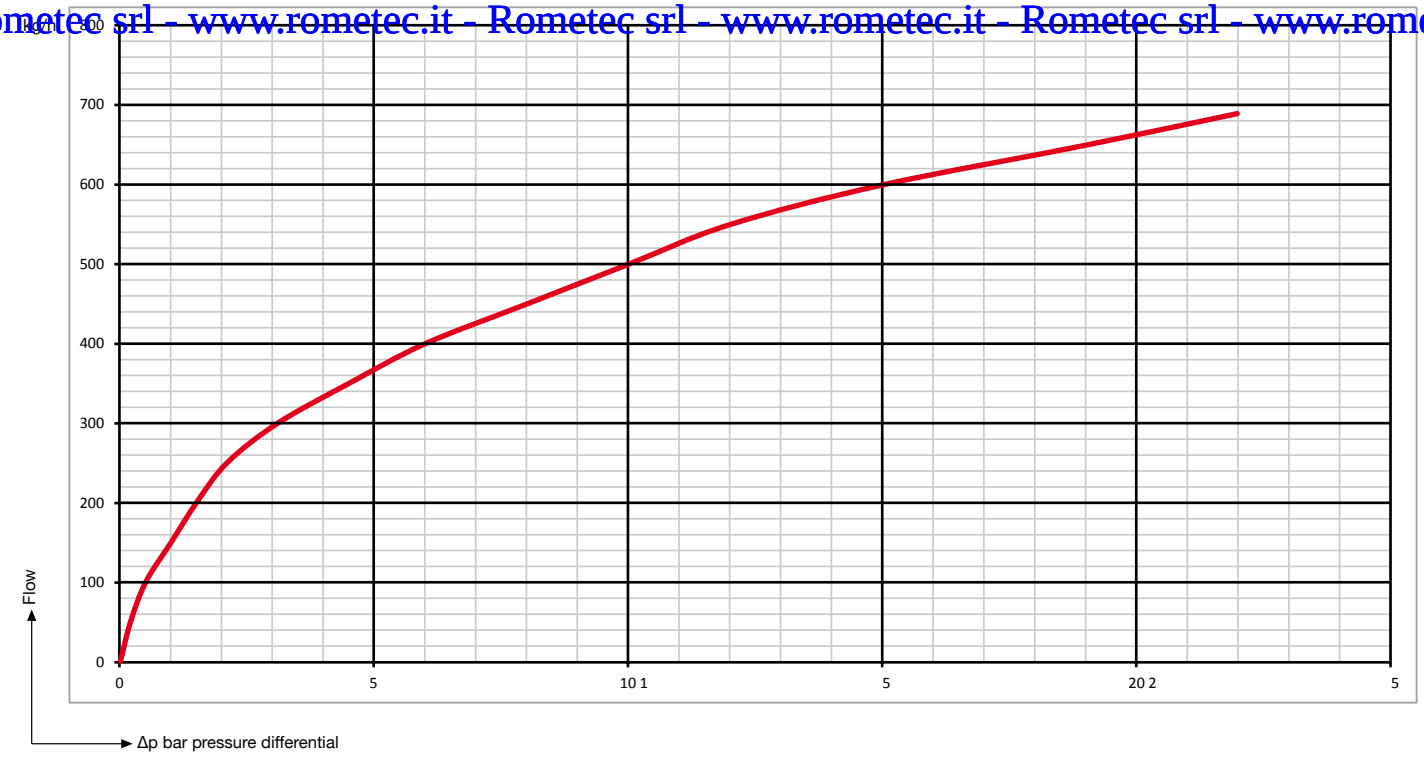

DIMENSIONAL COMPARISON OF CONVENTIONAL FLANGE THERMOSTATIC PURGER AND THERMOSTATIC PURGER		
	Conventional flange thermostatic purger	Thermostatic purger Mod. 444
Distance	165	35,5
Weight	4 kg.	0,6 kg.
Filtering capacity		Similar (1)
Maintenance		30% faster

(1) The filtering capacity of Mod. 443 is 400% higher.

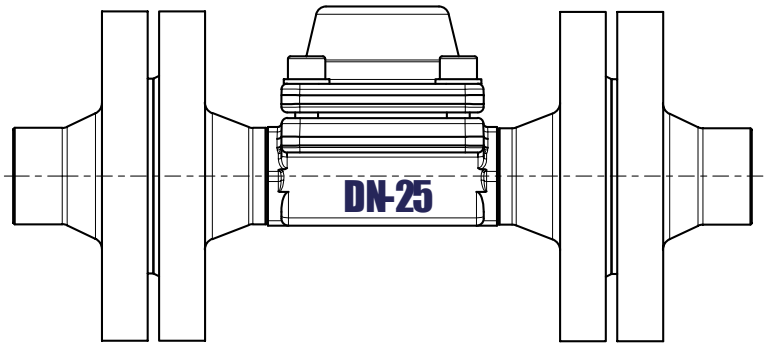

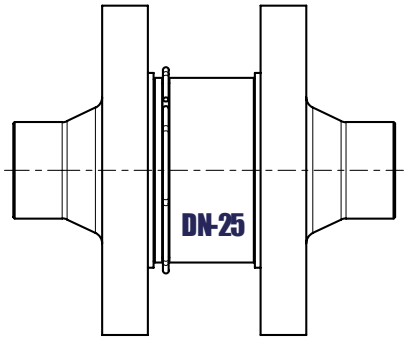

Mod. 444

VYC industrial, sa
Founded in 1914
www.vycindustrial.com
Avenc del Bosc, 29 - Pol. Ind. Can Petit - 08227 TERRASSA (Barcelona) SPAIN
+34 93 735 76 90 +34 93 735 81 35 T19 info@vycindustrial.com

Rometec srl - www.rometec.it - Rometec srl - www.rometec.it - Rometec srl - www.rometec.it